Welcome!

Device Characterization with the Keithley Model 4200-SCS Characterization System

4210-CVU Applications Training
Agenda

- Theory of Operation and Measurement Overview
- Measurement Techniques and Optimization
- Troubleshooting

Prerequisites for Training

This training assumes that the user is already is familiar with using the 4200 and KITE, and knows how to create a project.

CVU Measurement Overview

- The CVU is a multi-frequency (10kHz-10MHz) impedance measurement card.
- Measures impedance by sourcing an ac voltage across the DUT and measuring the resulting ac current and ac voltage.

  ***one ac voltage measure range: 100 mV rms

  ***three ac current ranges: 1 μA, 30 μA, and 1 mA

- The time domain of the ac current and ac voltage must be processed into the frequency domain to produce the phasor form of the DUT impedance.
- The capacitance and conductance are derived parameters from the impedance and phase.
- DC voltage bias can be applied to the DUT (+/- 30V).

Simplified Block Diagram

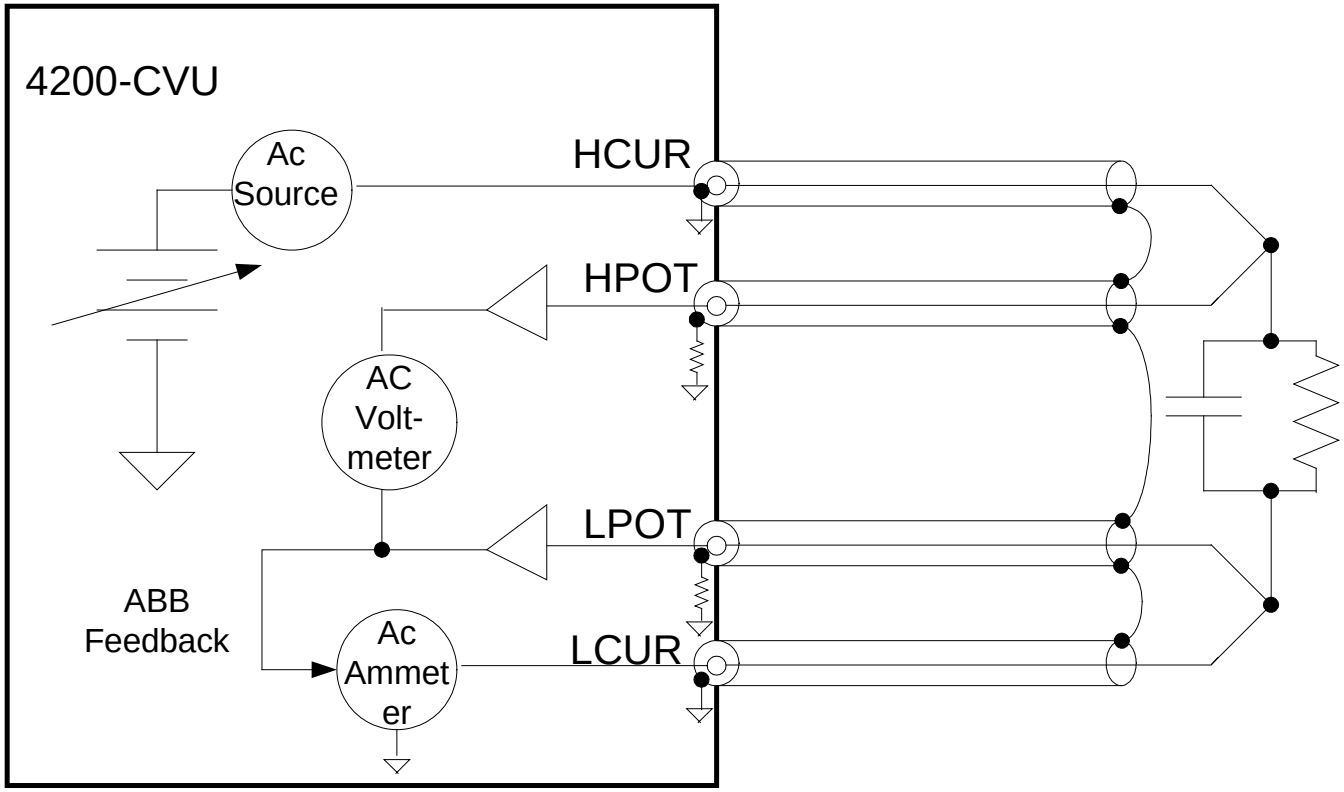

Simplified Block Diagram

Measures AC impedance (Z_{DUT}) of the DUT by sourcing an AC voltage across the device and measuring the AC voltage and the resulting AC current.

The time-domain AC values are processed into the frequency-domain to produce the phasor form of the impedance.

ABB Method

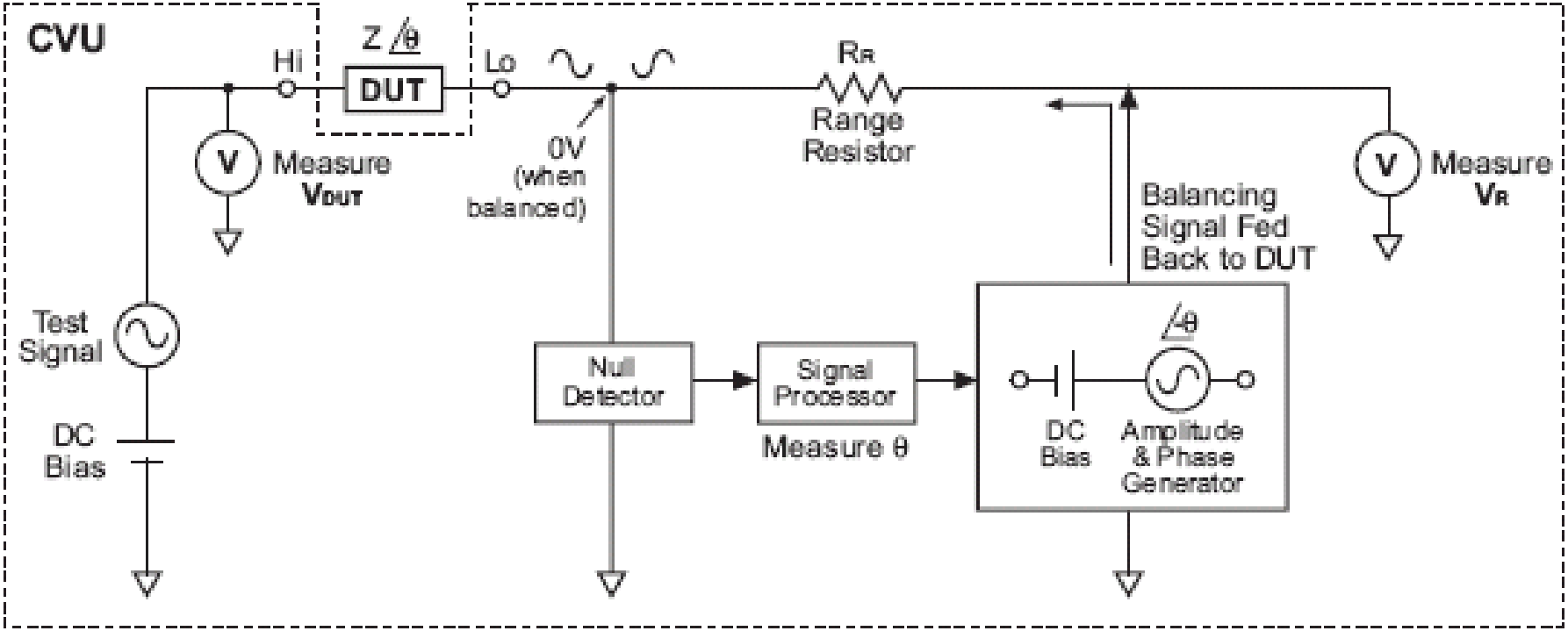

Basic AC Impedance Information
Measured Parameters

Z, Theta – Impedance and Phase Angle

R + jX – Resistance and Reactance

Cp-Gp – Parallel Capacitance and Conductance

Cs-Rs – Series Capacitance and Resistance

Cp-D – Parallel Capacitance and Dissipation Factor

Cs-D – Series Capacitance and Dissipation Factor

Cs-Rs

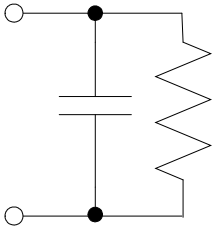

Cp-Gp

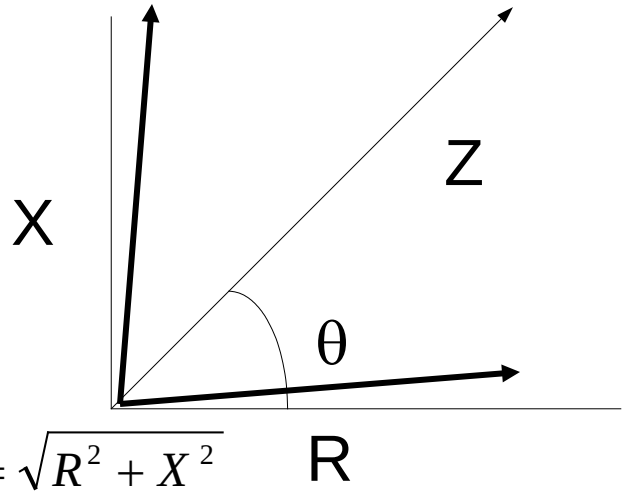

$$|Z| = \sqrt{R^2 + X^2}$$

Z = R + jX

$$\theta = \arctan\left(\frac{X}{R}\right)$$

R = Zcosθ

X = Zsinθ

$$Y = \frac{1}{Z} = G + jB$$

Where:
Z=impedance
θ=phase angle
R=resistance
X=reactance
Y=admittance
G=conductance
B=susceptance

$$D = \frac{R}{X_C} x100\% = \frac{R}{1/\omega C} x100\%$$

KEITHLEY

6

Calculating Inductance

Even though the 4200-CVU does not measure inductance directly, the inductance can be extracted in the Formulator from the Impedance (Z), Phase Angle (theta, θ), and the Test Frequency (f).

$X = Z\sin\theta$
$L = X/2\pi f$

The Measured Options Parameters must be set to “Z, theta”.
NOTE: The units for “theta” are in degrees. To use the trig functions in the Formulator, you must convert to rads using the “rad” function as shown below.

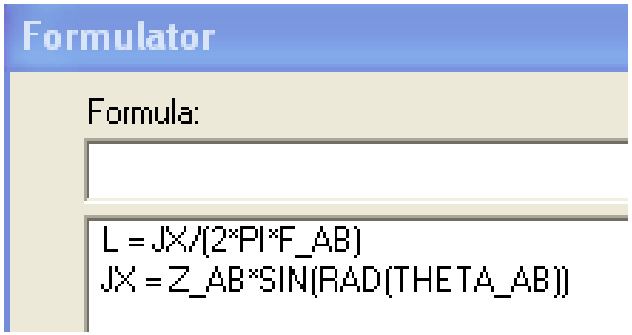

	A	B	C	D
1	Z_AB	Theta_AB	F_AB	L
2	201.2324E+0	89.6566E+0	10.0000E+3	3.1791E-3
3	201.2161E+0	89.6538E+0	10.0000E+3	3.1800E-3
4	201.2274E+0	89.6600E+0	10.0000E+3	3.1778E-3
5	201.2336E+0	89.6614E+0	10.0000E+3	3.1773E-3
6	201.2417E+0	89.6572E+0	10.0000E+3	3.1791E-3
7	201.2281E+0	89.6566E+0	10.0000E+3	3.1791E-3
8	201.2226E+0	89.6583E+0	10.0000E+3	3.1783E-3
9	201.2371E+0	89.6578E+0	10.0000E+3	3.1787E-3

Maximum Capacitance

The measurement accuracy of the 4200-CVU is specified up to 100 nF. However, the CVU can make much higher capacitance measurements. The maximum capacitance is based on test frequency, ac drive voltage, and range.

The Capacitance Range Estimator in the CVU Terminal Properties Window shows CMax values in the mF range.

However, capacitance values above 100 nF are not tested or calibrated.

In general, to measure high capacitances, use the lowest test frequency (10 kHz), the smallest AC drive voltage (10 mV rms), and the maximum current range (1 mA or autorange).

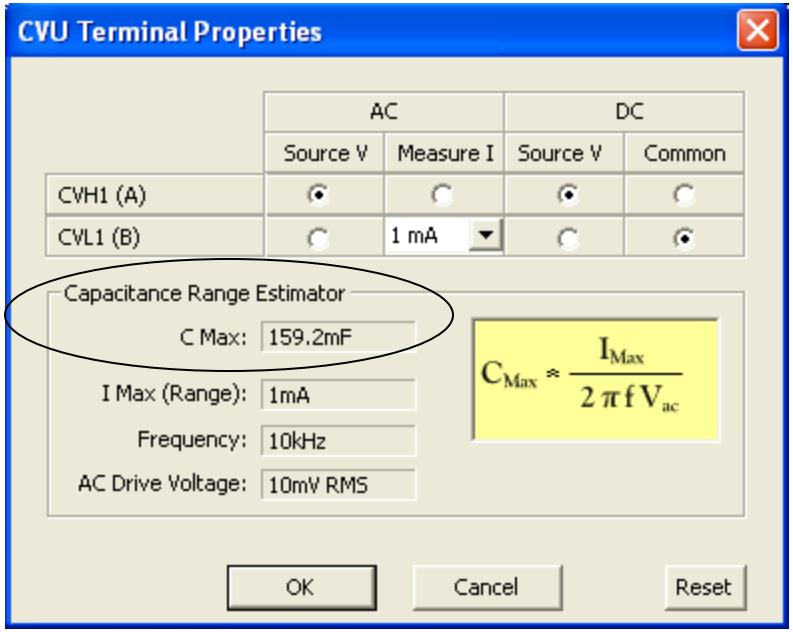

KEITHLEY

A GREATER MEASURE OF CONFIDENCE

8

Minimum Capacitance

The Minimum Capacitance that can be measured by the 4200-CVU is a difficult question to answer because there are many variables in the test system such as test frequency, ac drive voltage, cables, device factors, open correction, switch matrix, etc.

However, based on the specifications with a 1 MHz test frequency and 30 mV rms drive voltage, the measurement accuracy of a 1 pF capacitor is:

+/- .38%

The range of measured capacitance: 1.0038 pF to .9962 pF

Measuring Hundreds of Femto-Farads

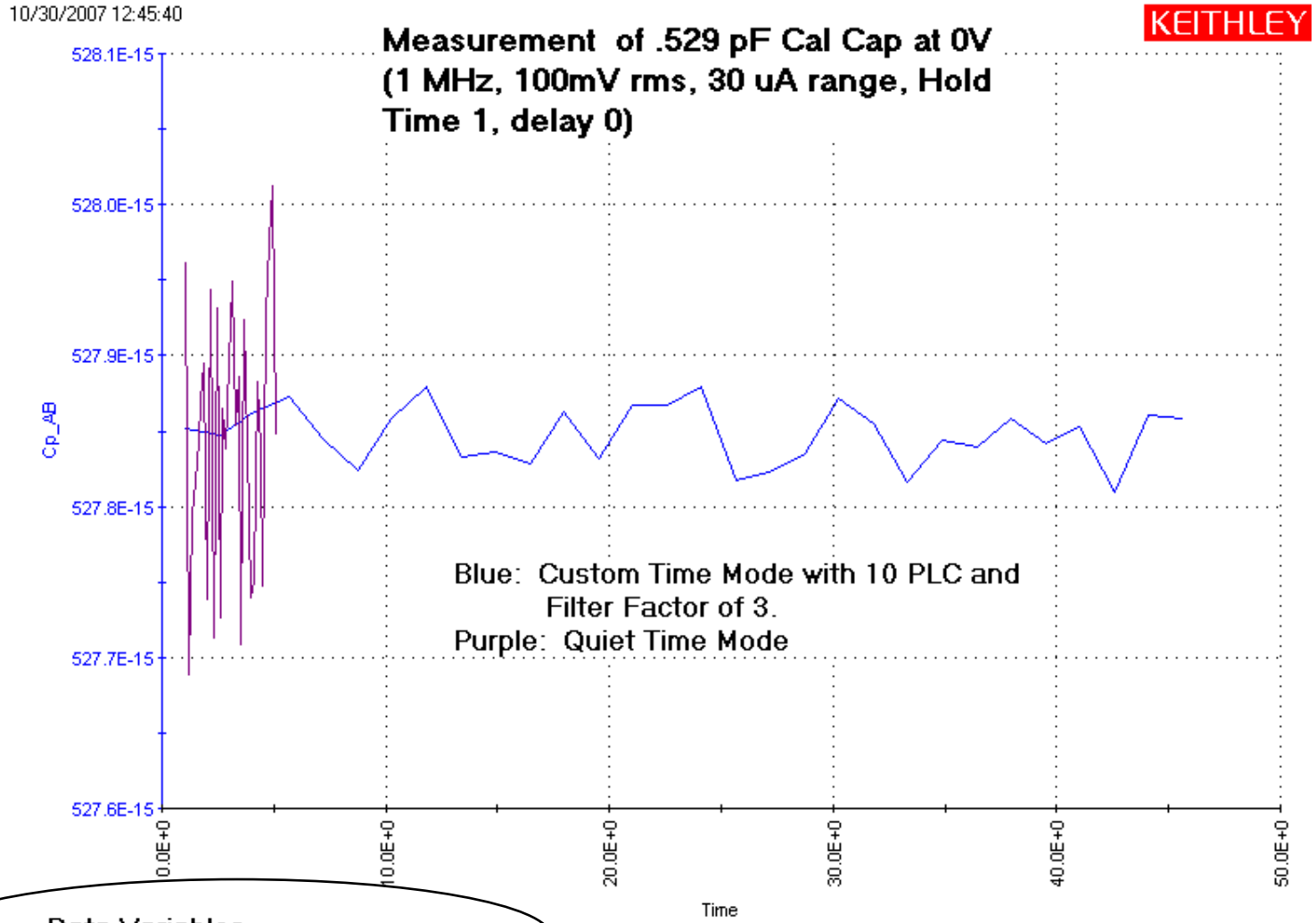

Data Variables
Data:STDDEV = 19.33880e-18