nanoHUB online simulation and more — an NCN project

Network for Computational Nanotechnology (NCN)

UC Berkeley, Univ.of Illinois, Norfolk State, Northwestern, Purdue, UTEP

First-Time User Guide
BJT Lab V2.0

Saumitra R. Mehrotra*, Ben Haley & Gerhard Klimeck

Network for Computational Nanotechnology (NCN)

Electrical and Computer Engineering

http://nanohub.org/resources/bjt

*smehrotr@purdue.edu

Table of Contents

Introduction: What is a BJT?

•Bipolar Junction Transistor (BJT): Three-terminal device used for amplifying or switching

BJT can be *npn* or *pnp* depending on doping.

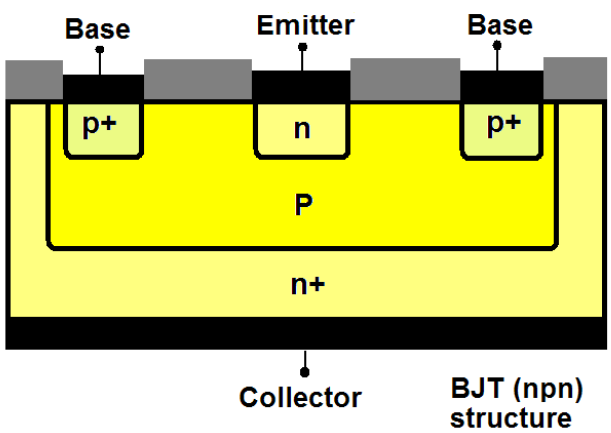

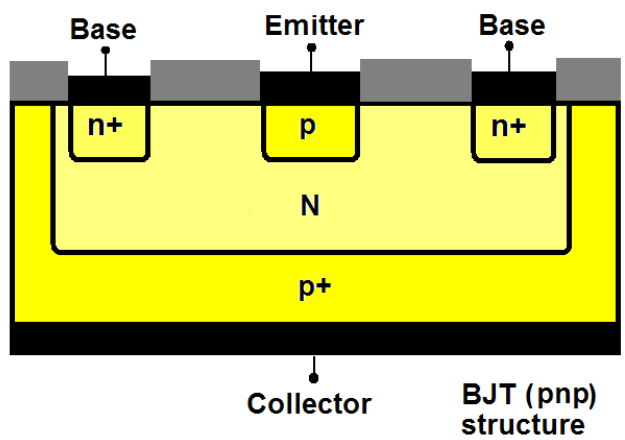

n/N/n+ : donor impurities

p/P/p+ : acceptor impurities

Introduction: Working of a BJT

- Functioning of BJT: current controlled current regulators
- Base current: controlling current
- Emitter-collector current: controlled current

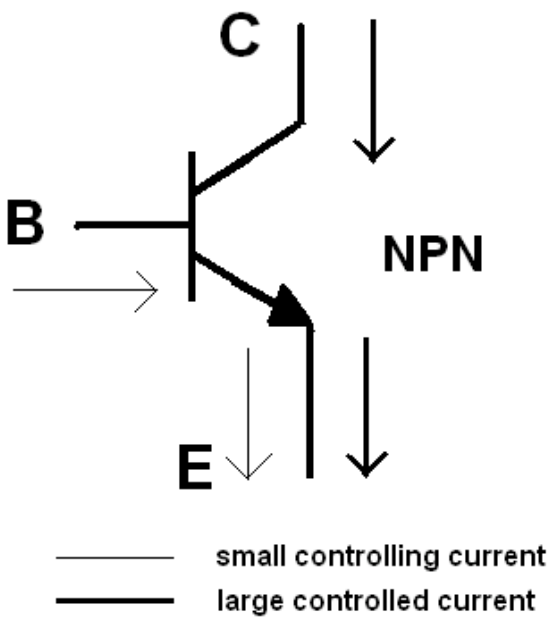

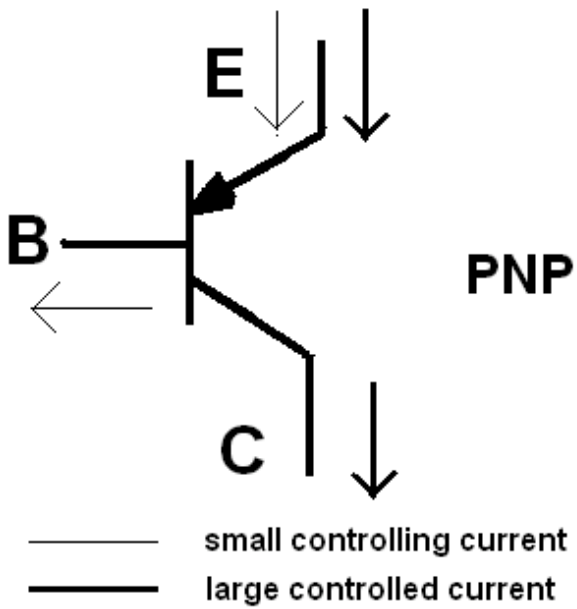

Refer to [1] https://nanohub.org/resources/5084/ for detailed information about the operation of BJT.

What Can Be Simulated in BJT Lab?

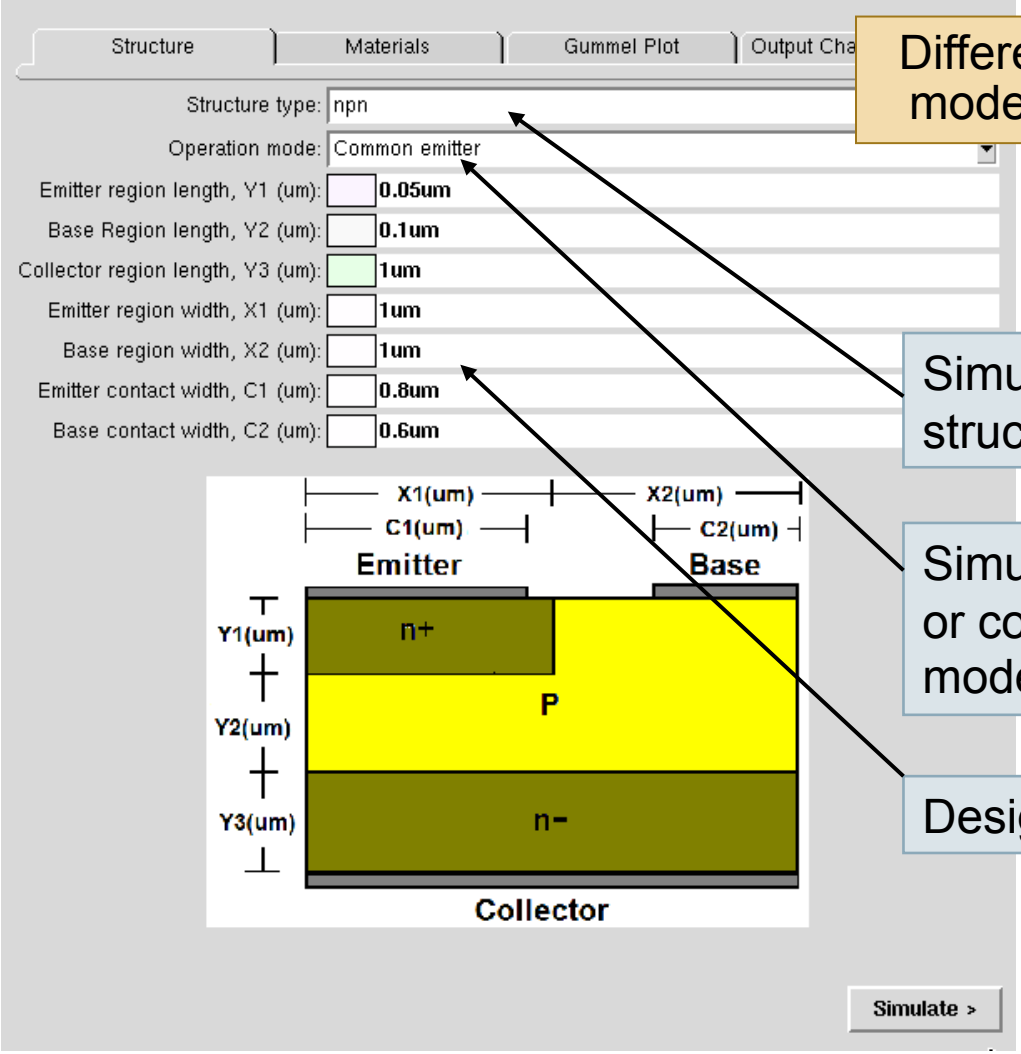

Different structure and operation modes of BJT

Simulate *npn* or *pnp* BJT structure

Simulate BJT in common emitter or common base operation mode

Design the device structure

What Can Be Simulated in a BJT Lab?

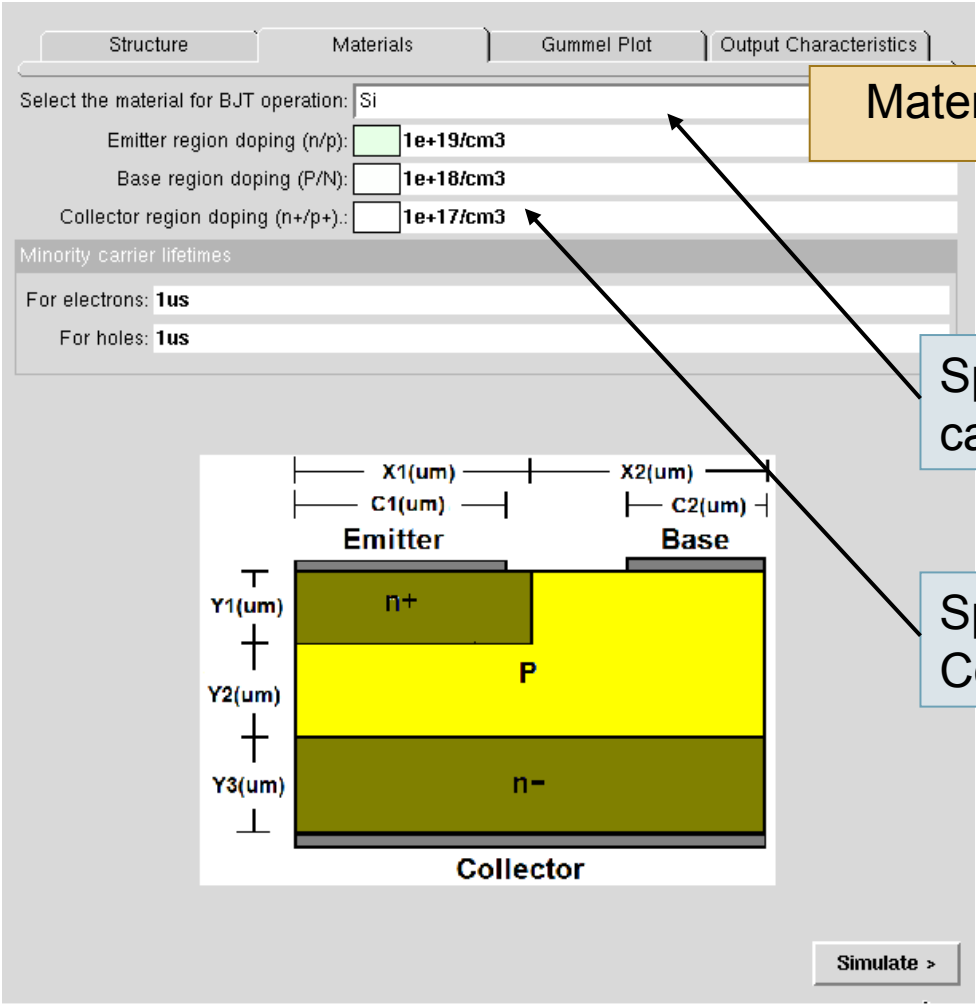

Material parameters for BJT simulation

Specify material and minority carrier lifetimes

Specify doping level for Emitter, Collector, and Base regions

What Can Be Simulated in BJT Lab?

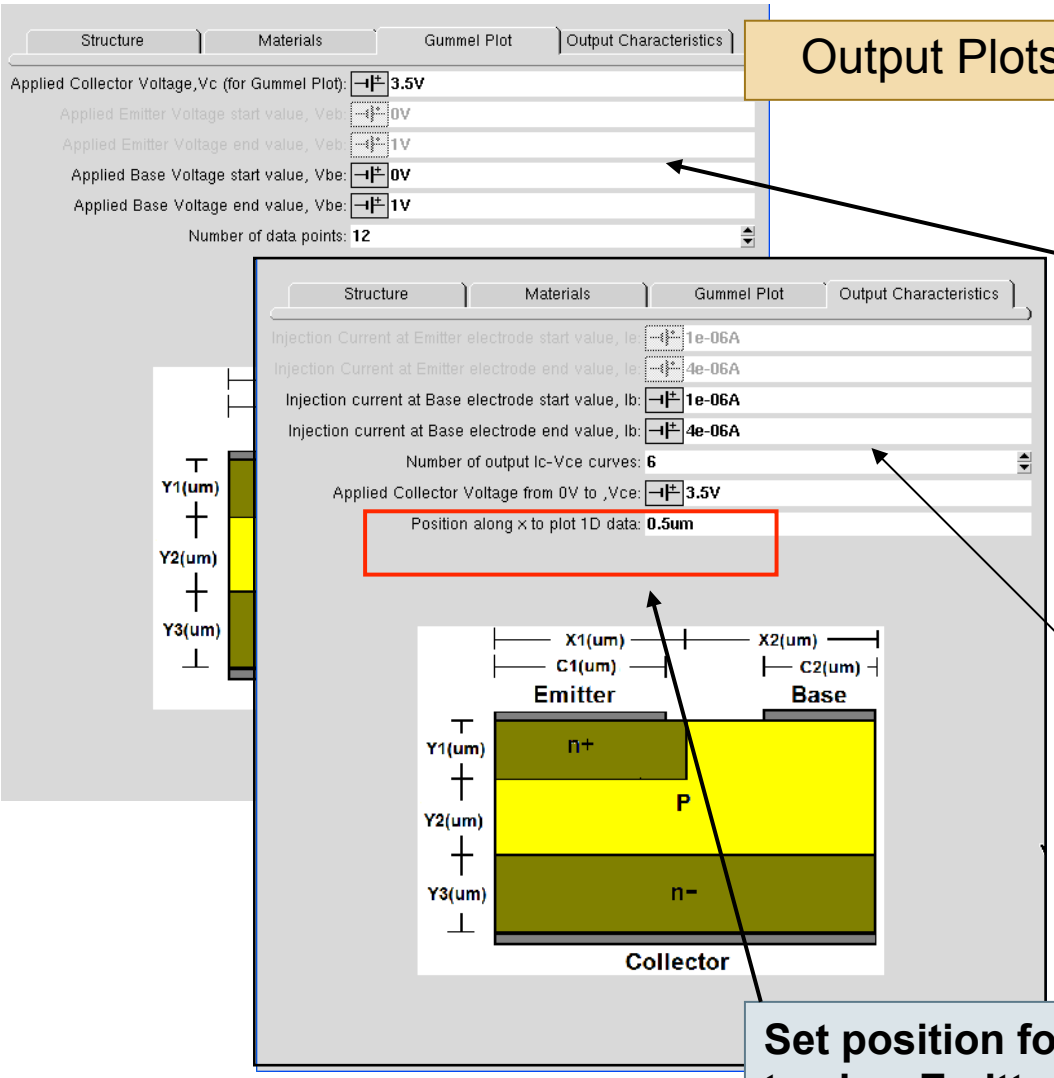

Output Plots from BJT Lab

Gummel plot input deck

- Gummel plot is useful in extracting beta, ß parameter for a BJT device

Output Chararacteristics

- Useful in determining output resistance, early voltage, etc.

Set position for 1D plot less than X1 to view Emitter profile!

What If You Just Hit "Simulate"?

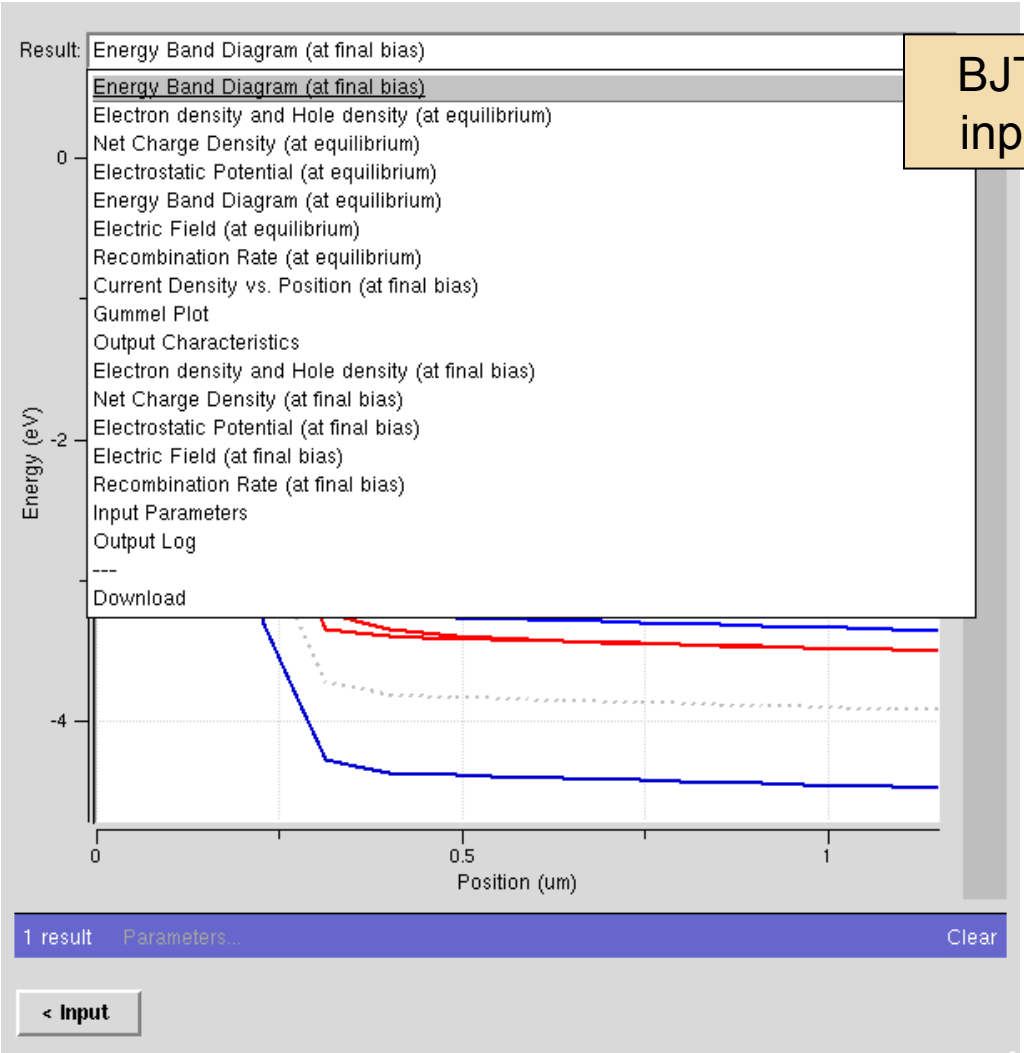

BJT Lab simulates the default input deck

Default device:

NPN type BJT in common emitter mode

	Emitter	Base	Collector
Length (μm)	0.05	0.1	1.0
Doping (/cm^3)	$1x10^{19}$	$1x10^{18}$	$1x10^{17}$

What If You Just Hit "Simulate"?

Gummel Plot

- $I_{collector}$ and I_{base} vs. V_{eb}.
- Users can extract the beta or h_{fe} parameter ß = $I_{collector}$ / I_{base}.

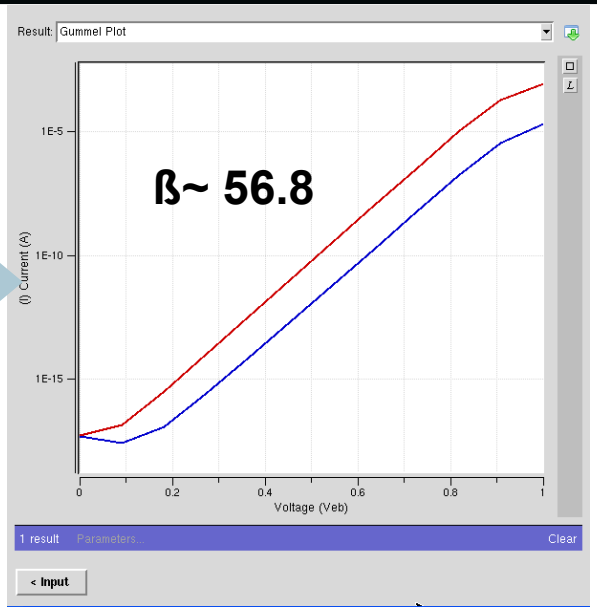

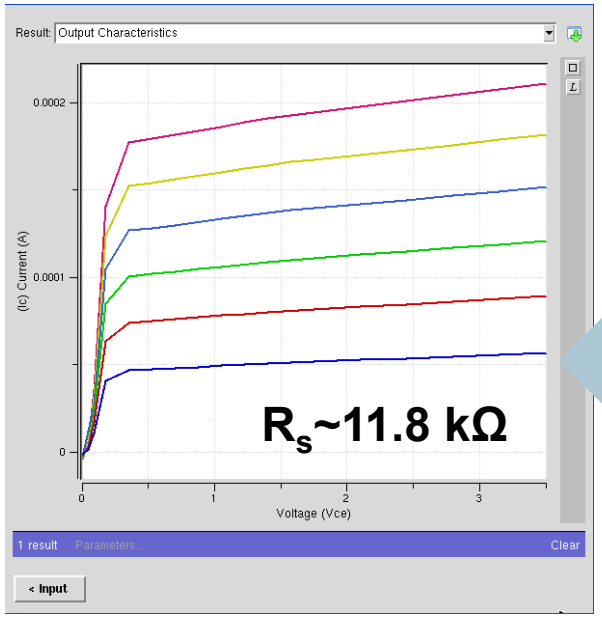

Output Characteristics ($I_{collector}$ Vs $V_{collector\text{-}emitter}$)

- The relatively flat region is the active region.
- The slope of I_c vs. V_{ce} is output (or collector) resistance, Rs.

What If You Just Hit "Simulate"?

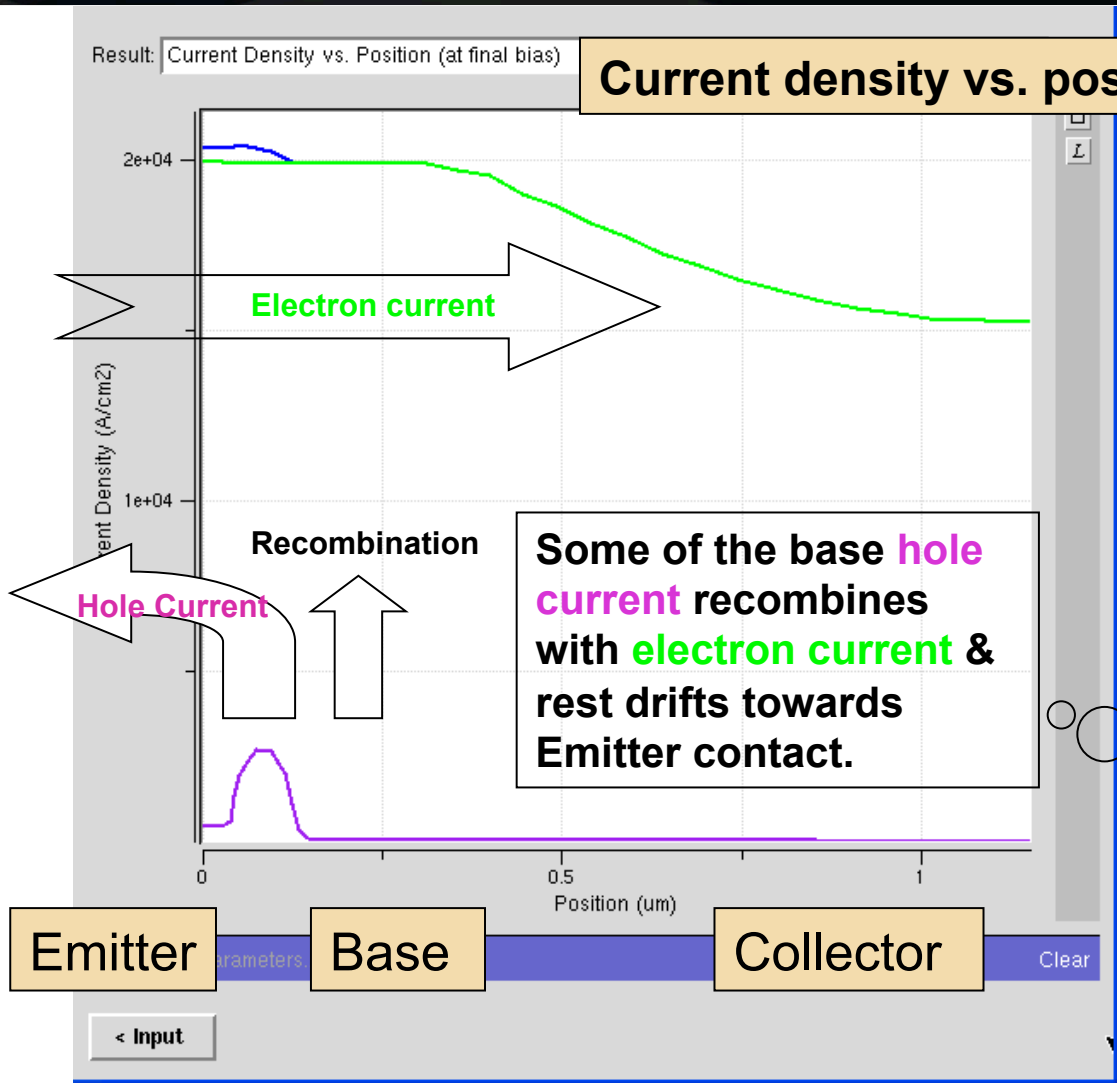

Current density vs. position 1D plot

- **Emitter:x=0-0.05um**
- **Base:x=0.05-0.15um**
- **Collector:x=0.15-1.15um**
- **Reduction in current density due to flaring out of collector current into larger region**

Some of the base hole current recombines with electron current & rest drifts towards Emitter contact.

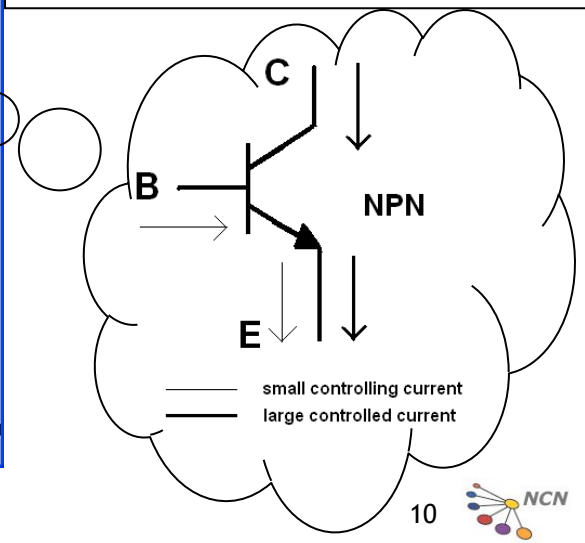

Examples: What if the Collector Doping is Changed?

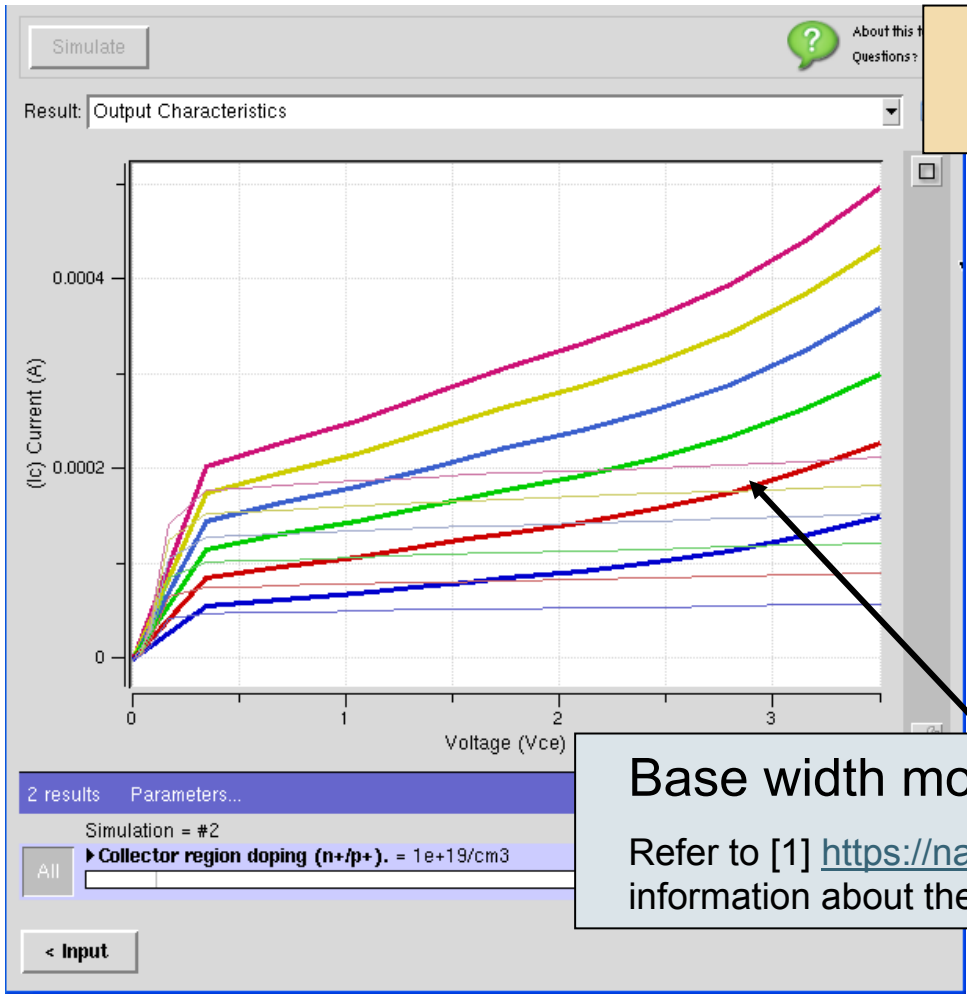

Changing collector doping to 1e19 /cm^3

	Emitter	Base	Collector
Length (µm)	0.05	0.1	1.0
Doping (/cm^3)	1x10^{19}	1x10^{18}	1x10^{19}

Base width modulation or early effect

Refer to [1] https://nanohub.org/resources/5084/ for detailed information about the operation of BJT.

Examples: What if the Base Width is Changed?

Changing base width to 0.2 μm

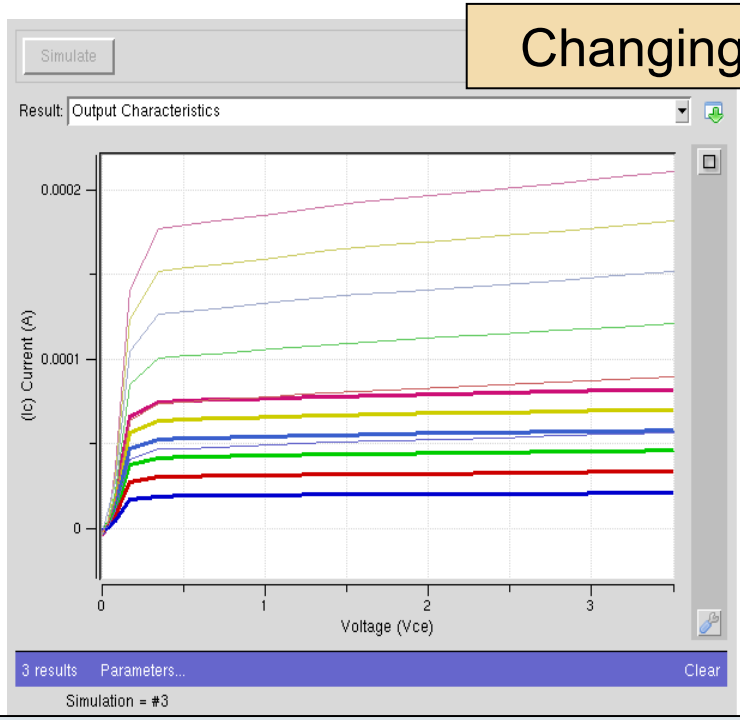

	Emitter	Base	Collector
Length (μm)	0.05	0.2	1.0
Doping (/cm^3)	$1x10^{19}$	$1x10^{18}$	$1x10^{17}$

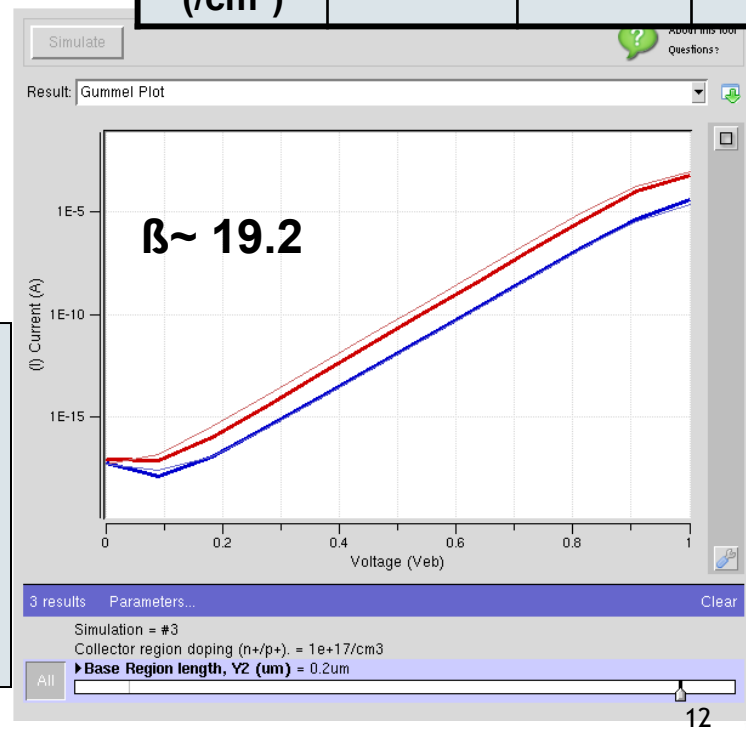

Increasing base width leads to smaller current gain factor

Refer to [1] https://nanohub.org/resources/5084/ for detailed information about the operation of BJT.

Tool Limitations and Comments

- Large physical dimensions (>10 μm) might lead to non convergence or large compute time.
- Take note that while plotting the 1D plot, the distance needs to be smaller than X1 (defined in Structure tab) to view the emitter region profile.
- Take note of the applied voltage values signs, while working with npn and pnp type.

References

BJT Theory

- [1] BJT OPERATION : https://nanohub.org/resources/5084/
- [2] “Semiconductor Device Fundamentals,” by R.F. Pierret
- PADRE
- [3] Dragica Vasileska; Gerhard Klimeck (2006), "Padre," DOI: 10254/ nanohub-r941.3.
- [4] PADRE MANUAL : http://nanohub.org/resource_files/tools/padre/doc/ index.html

---

If you reference this work in a publication, please cite as follows:

Saumitra Raj Mehrotra; Abhijeet Paul; Gerhard Klimeck; Dragica Vasileska (2008), "BJT Lab,"DOI: 10254/nanohub-r3984.7.

We welcome comments about this tool, including those about problems using the tool. Please submit via the following link: https://nanohub.org/resources/3984/reviews?action=addreview#reviewform