PURDUE UNIVERSITY

NCN

www.nanohub.org

ECE695A: Reliability Physics of Nano-Transistors

Reliability Measurements

Muhammad Ashraful Alam
and MuhammadMasuduzzaman

alam@purdue.edu

Copyright 2013

Reliability Measurements

What is special about reliability measurements?

Precision measurements

Customized measurements

Outline

1. **Different reliability measurements**
2. Measurement setup
3. Example Codes
4. Data analysis
5. Conclusion

Different Reliability Measurements

NBTI

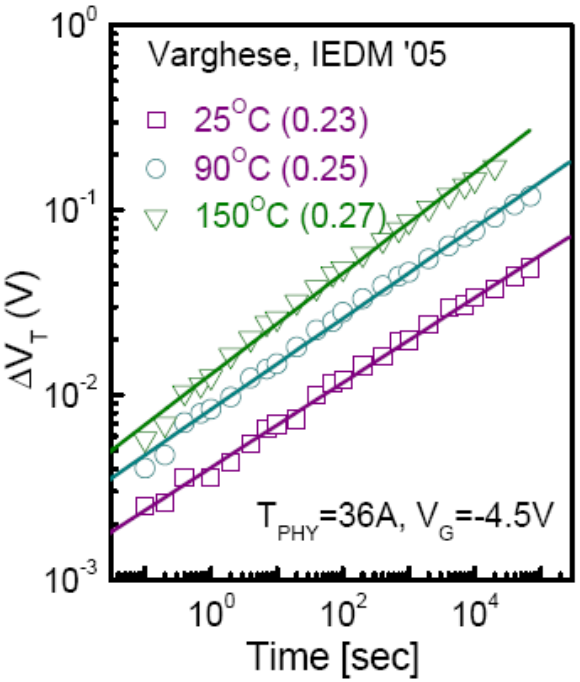

HCI

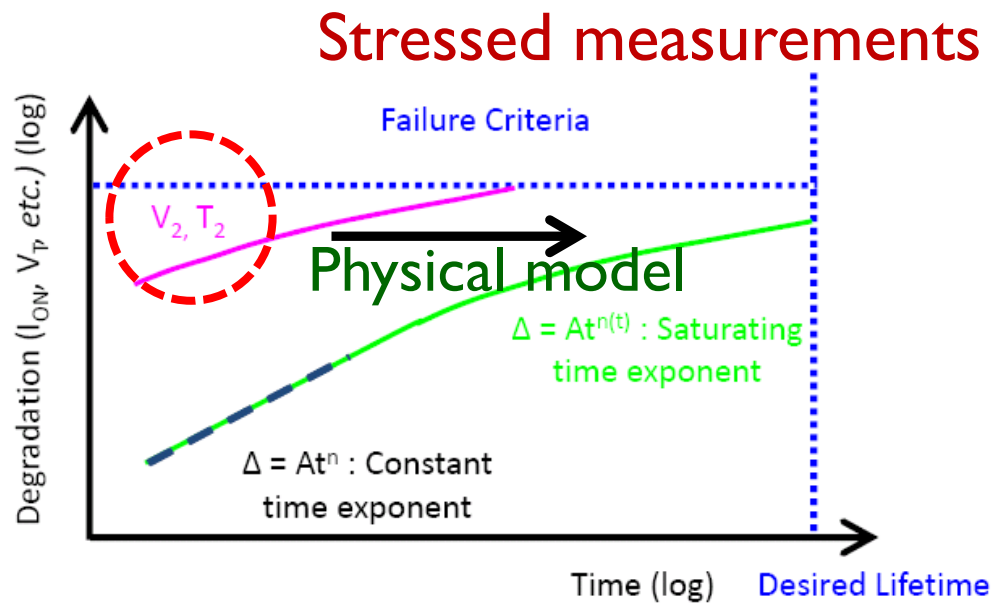

Measurements at low voltages/temperature can be very noisy as well as time consuming.

What should we measure

In general,
Y axis : (Some parameter that contains signature of degradation e.g., V_T, I_G, I_D, T_{BD}, ……

X axis: time

@ different **V_{stress}, T, sample**

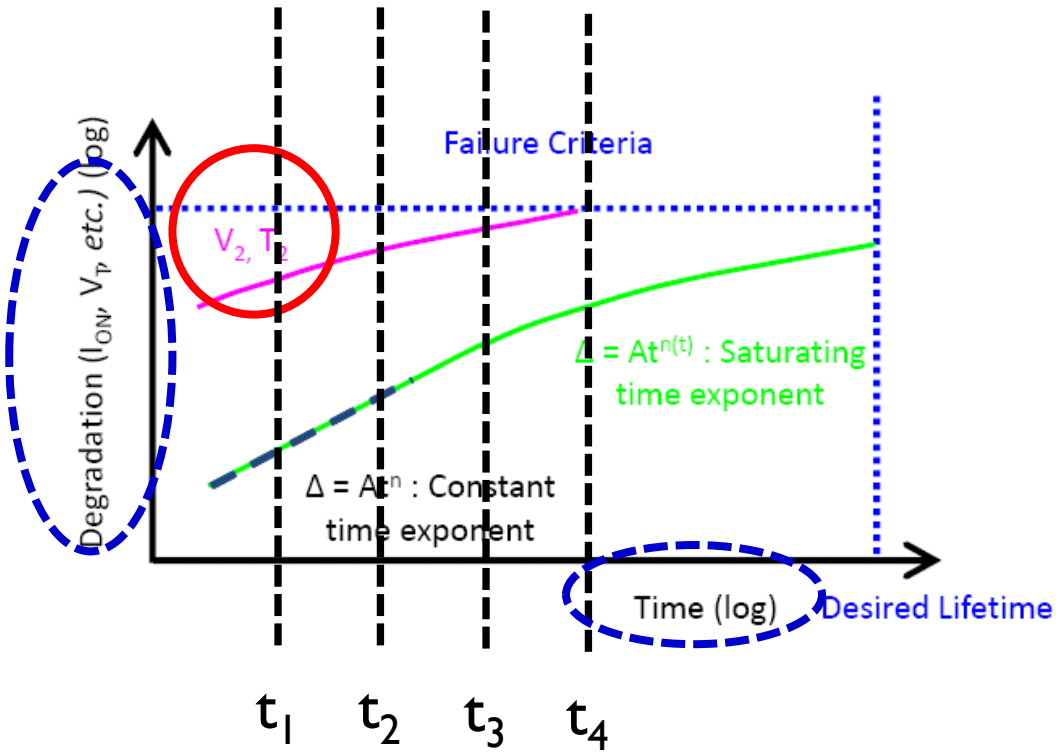

Temporal Measurement

Stressed/Temporal Measurements

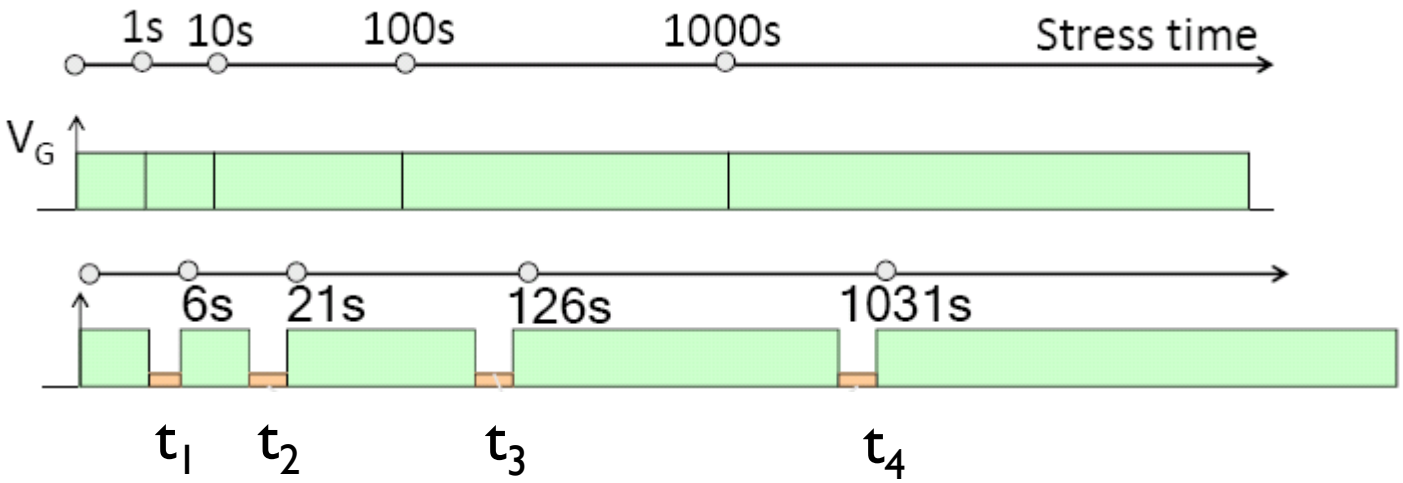

Some measurements can be done ***on the fly*** (Drain current, SILC,…) while for some, we have to stop and measure (Id-Vg, charge pumping,…)

Measure-Stress-Measure (MSM)

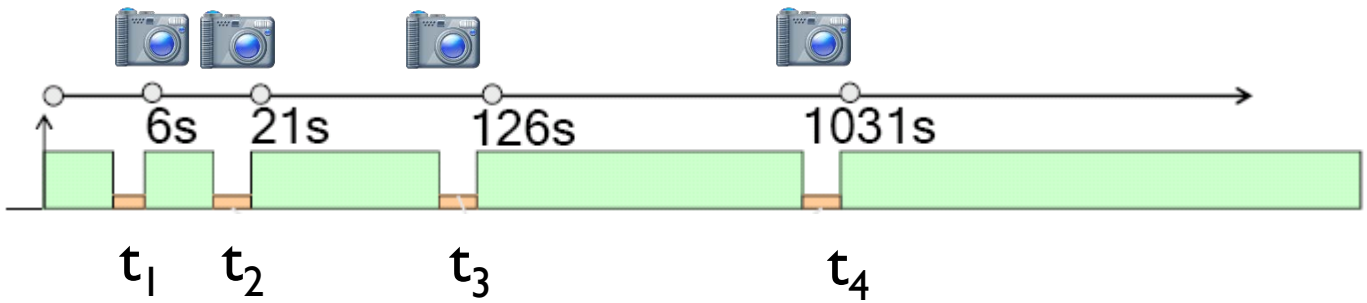

Taking snapshots sequentially…

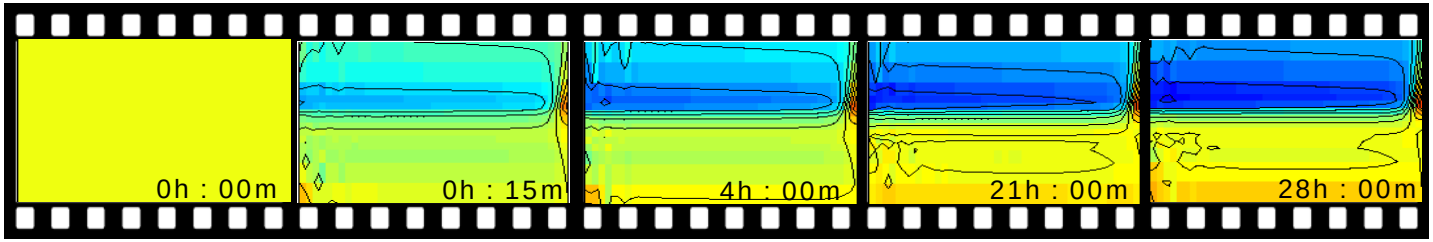

Outline

1. Different reliability measurements
2. **Measurement setup**
3. Example Codes
4. Data analysis
5. Conclusion

Circuit Schematic

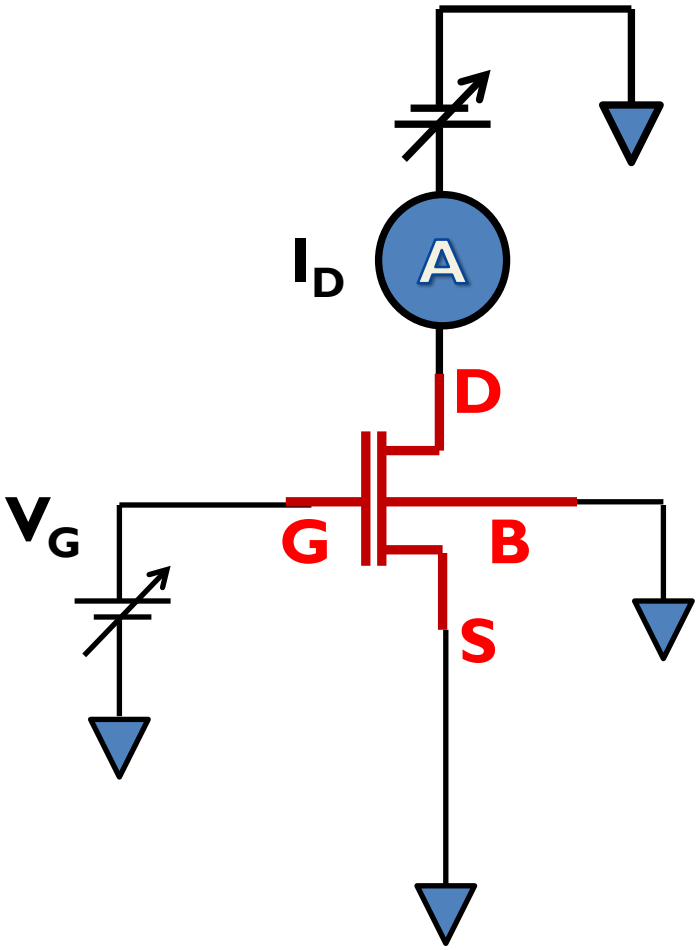

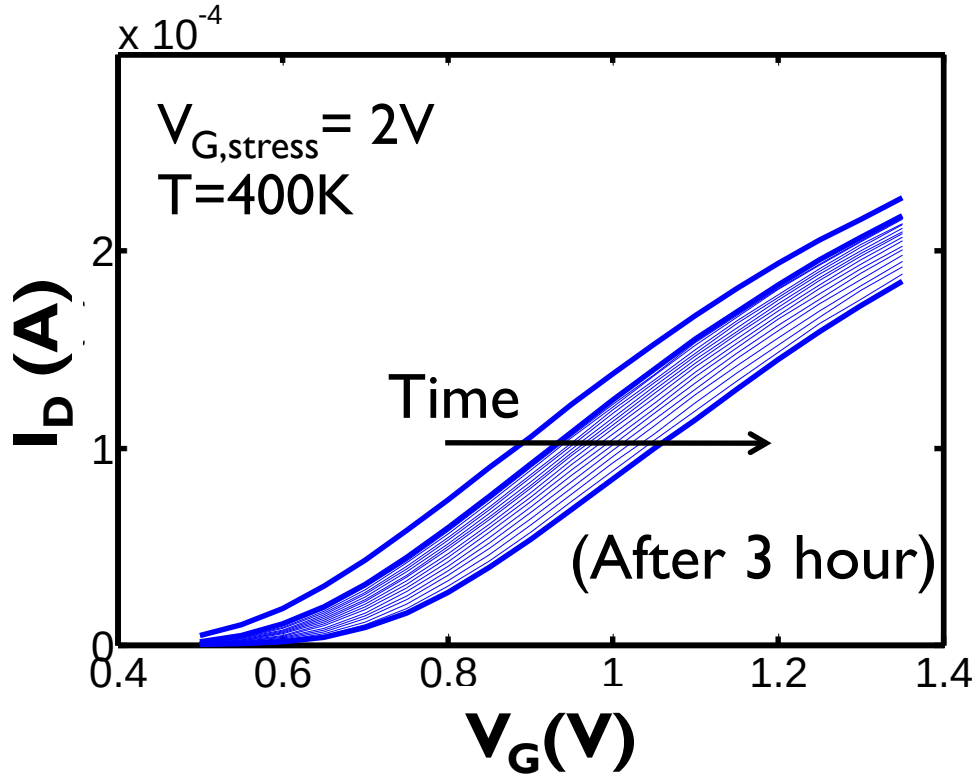

Measuring Id-Vg as a function of time, for a certain stress condition

Different Components

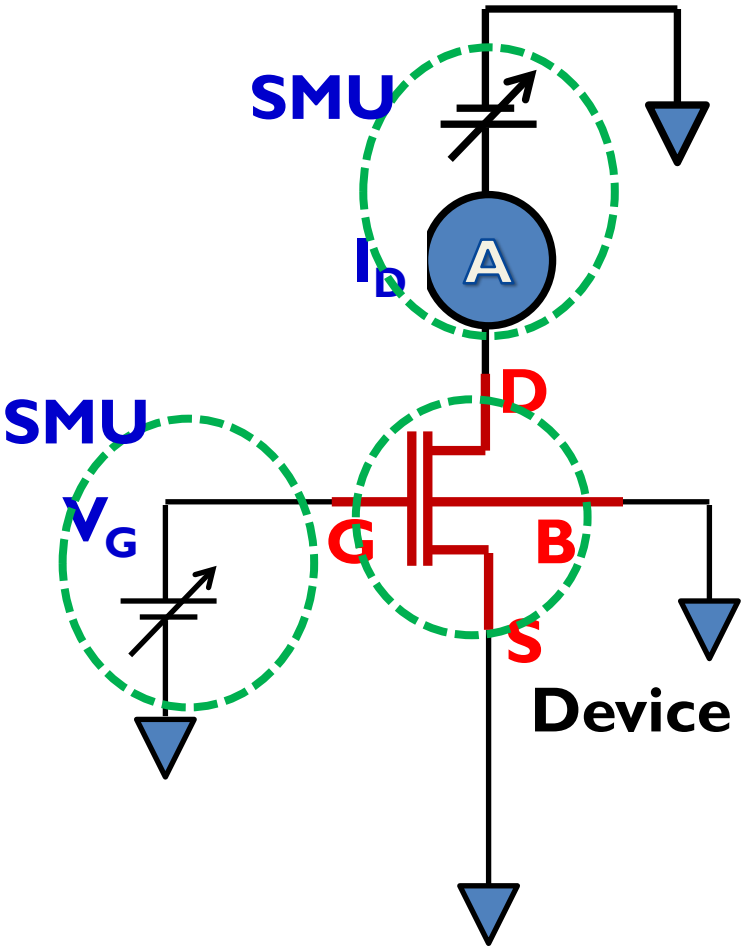

1. Device
2. Probe station
3. (a) Voltage/Current **S**ource Unit (Power Supply)
   (b) Voltage/Current **M**easure **U**nit (Multi-meter)

Integrated version:
Source **M**easure **U**nit

1. Devices

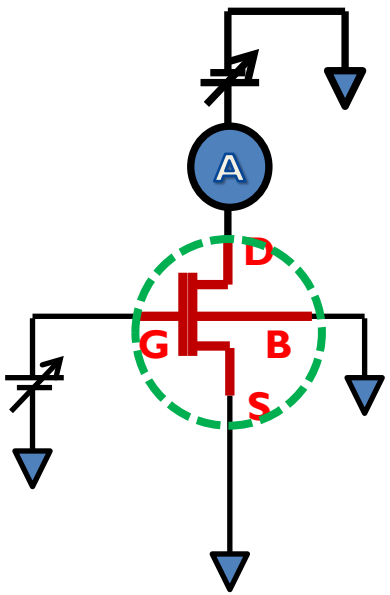

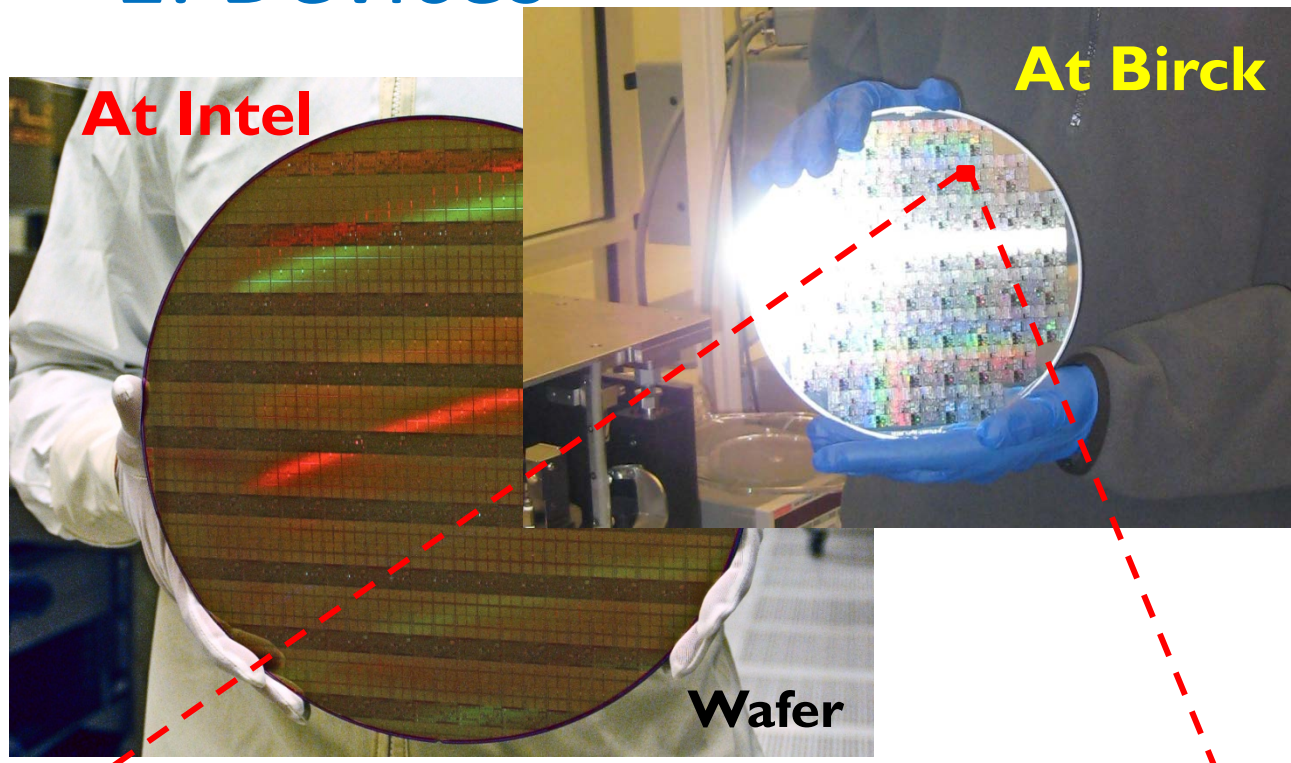

DUT	Width	Length	S	D	G
1	10	0.12	1	2	3
2	10	1	22	23	21
3	10	0.13	4	5	6
4	10	0.25	19	20	18
5	10	0.14	7	8	9
6	10	0.17	15	16	14
7	10	0.15	10	11	12

Wafer map

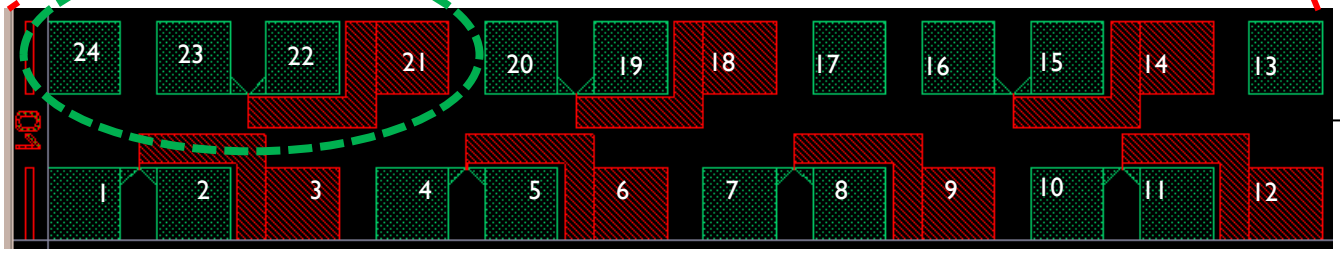

2. A modern Probe Station

Noise, leakage and vibration isolation ….

Temperature controller…

Automatic, remote operation …

Probe Station: a closer look

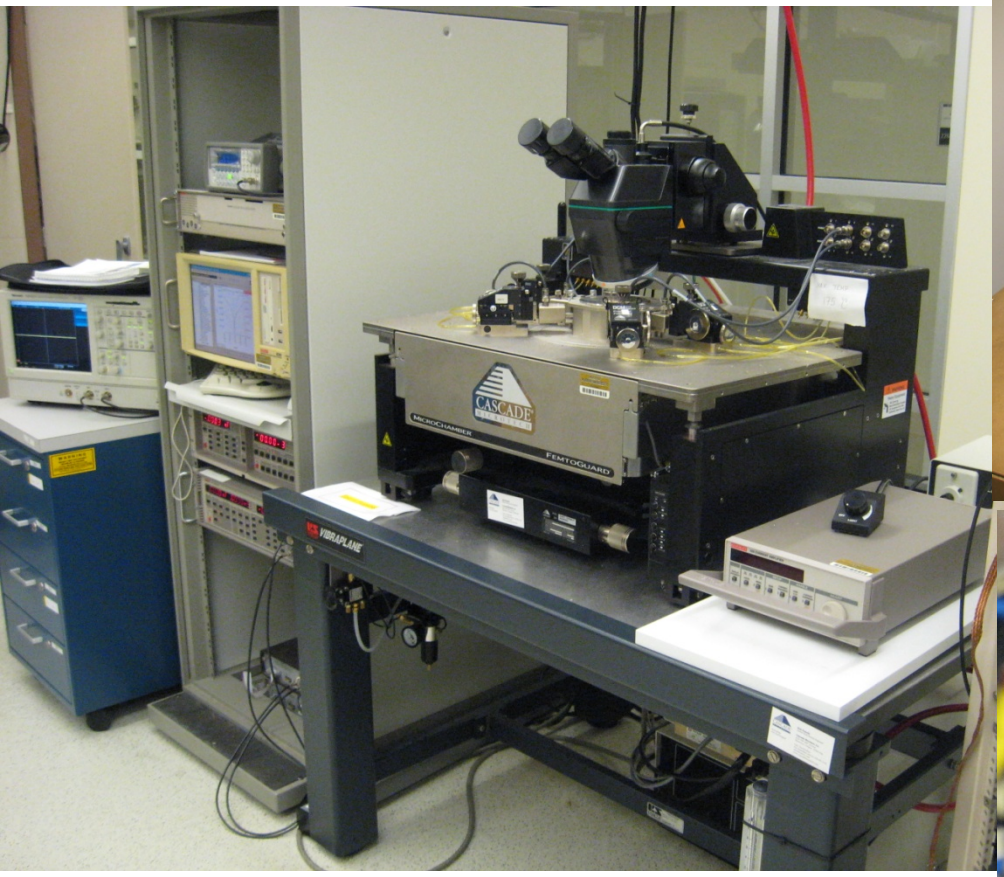

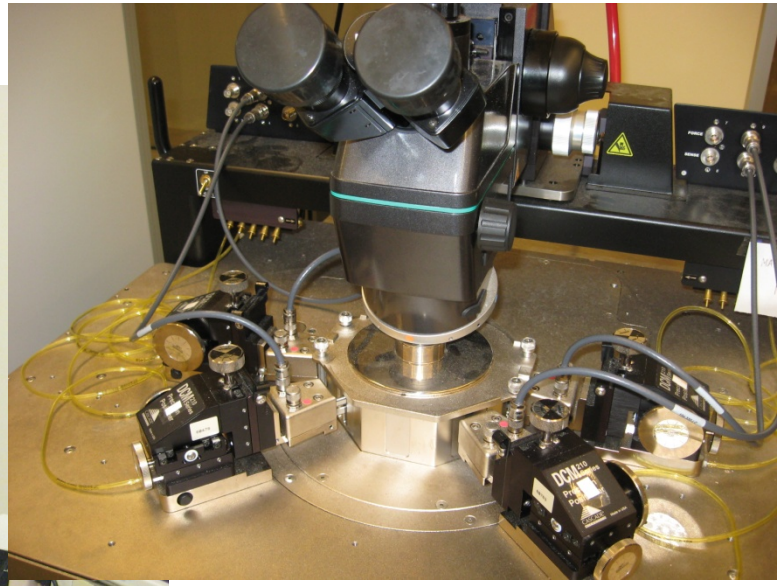

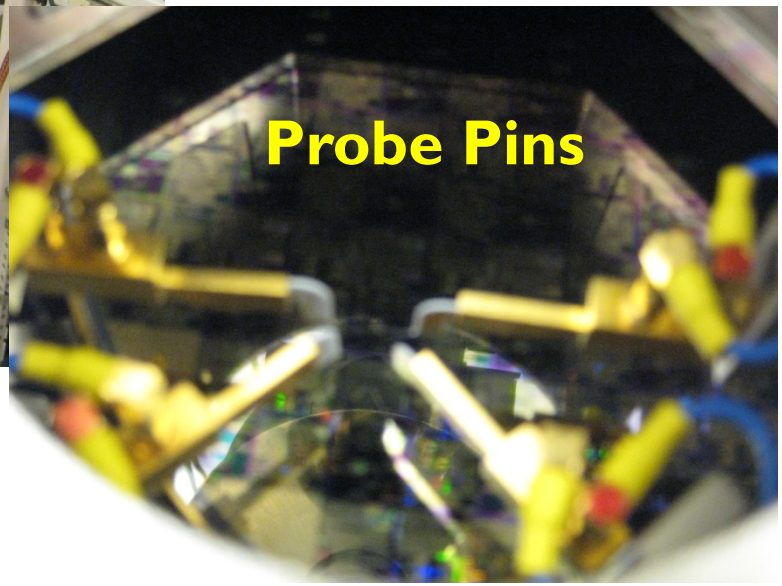

3. Source-Measure Unit (SMU)

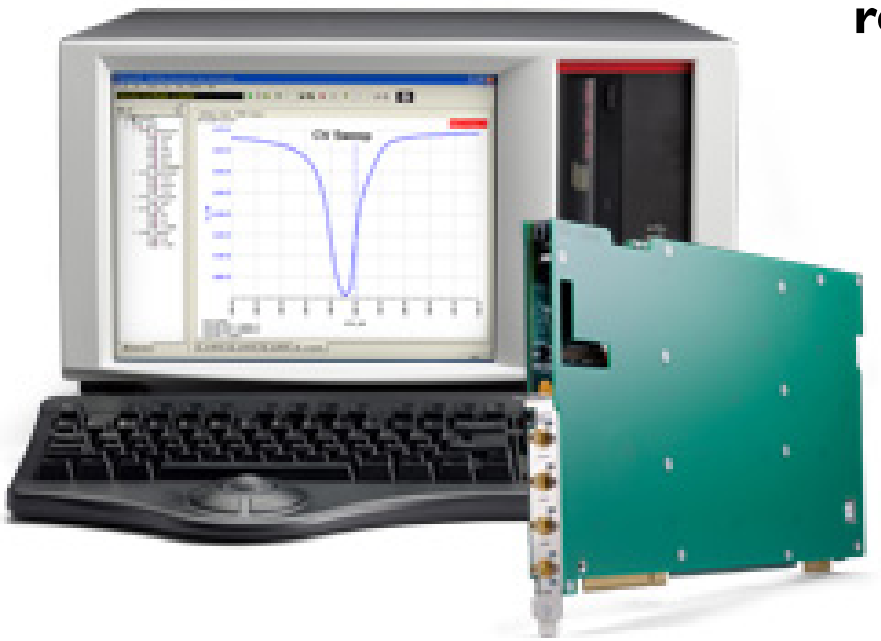

Standard SMU
Precision SMU (Better resolution)

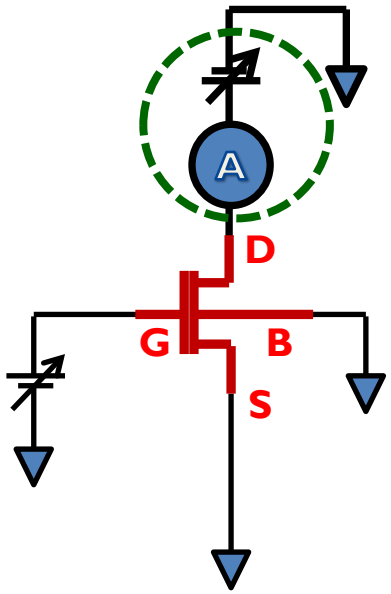

Noise and Resolution

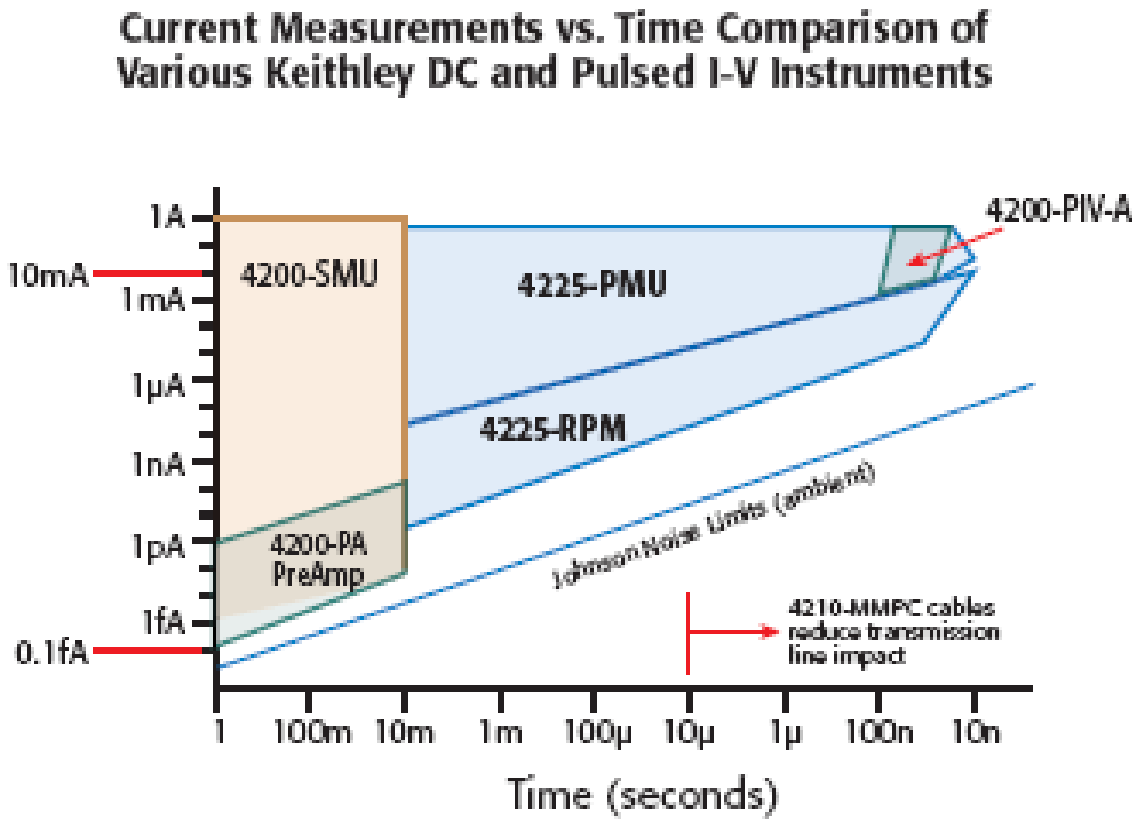

The accuracy depends on speed of the measurement

Running standard measurement

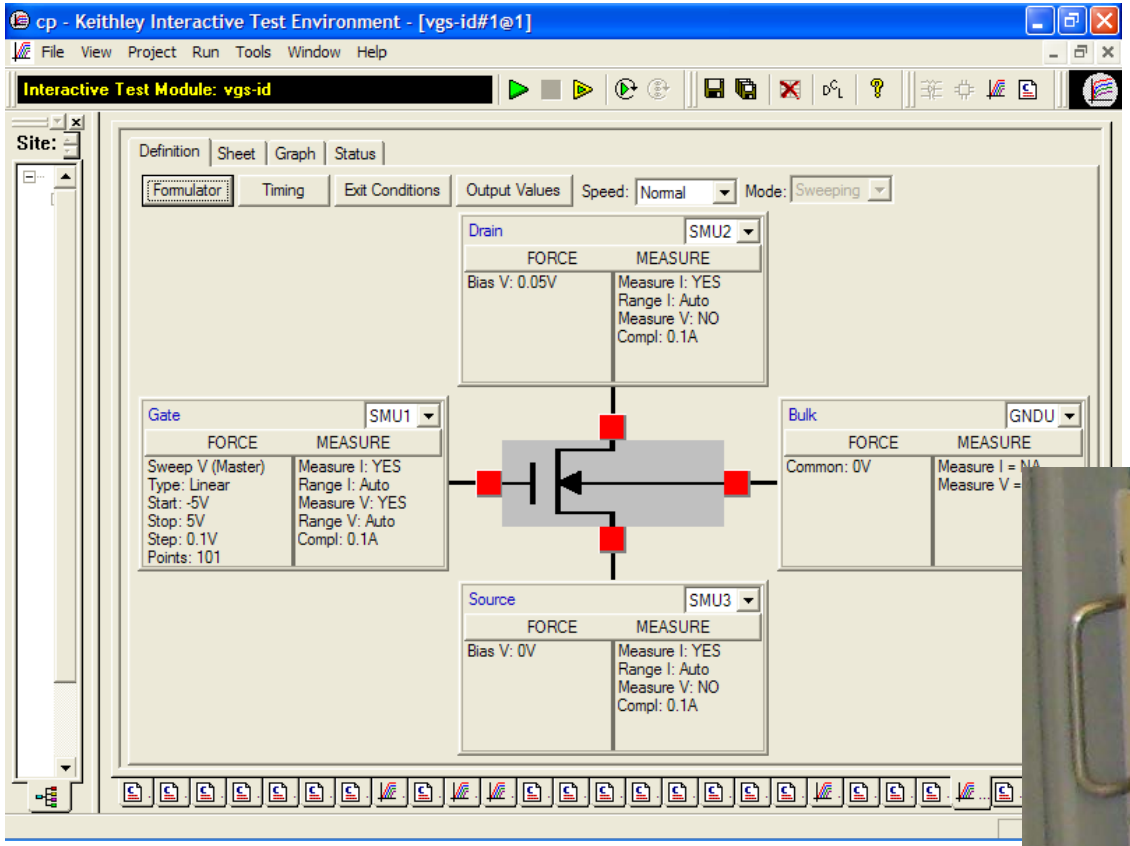

Standard program can be used for common measurements

A complex measurement setup

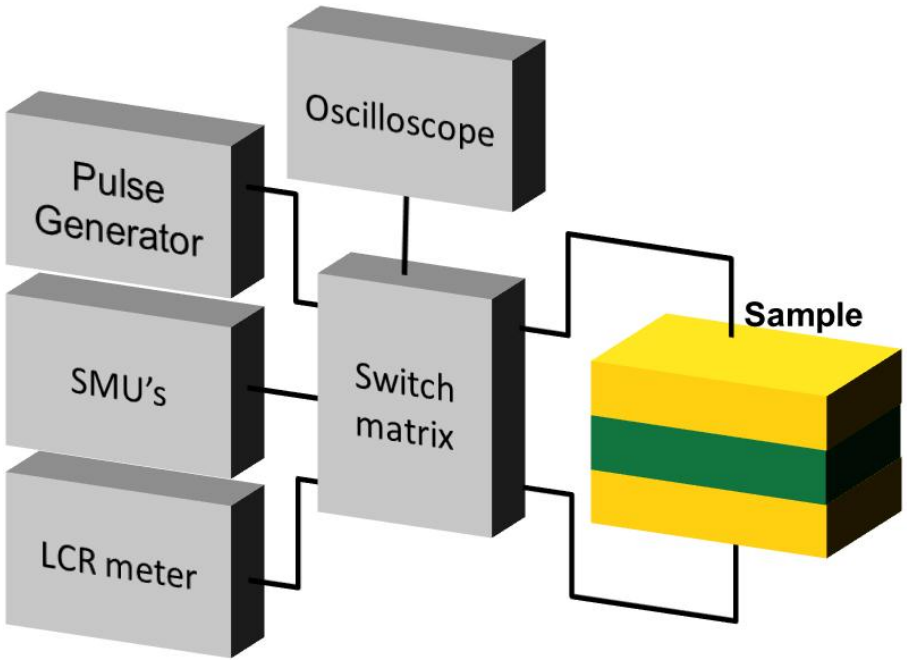

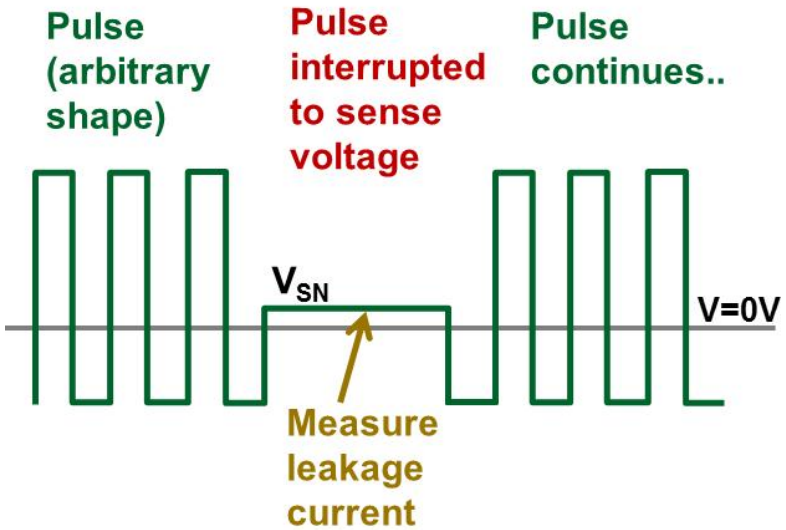

Outline

1. Different reliability measurements
2. Measurement setup
3. **Example Codes**
4. Data analysis
5. Conclusion

1. MSM (I_D-V_G)

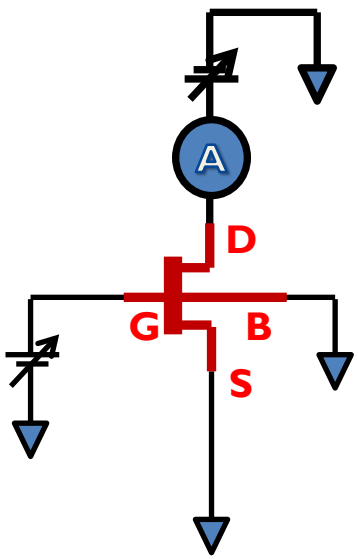

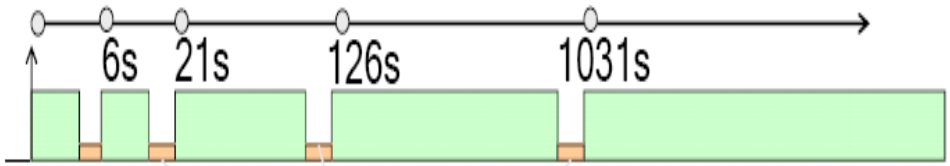

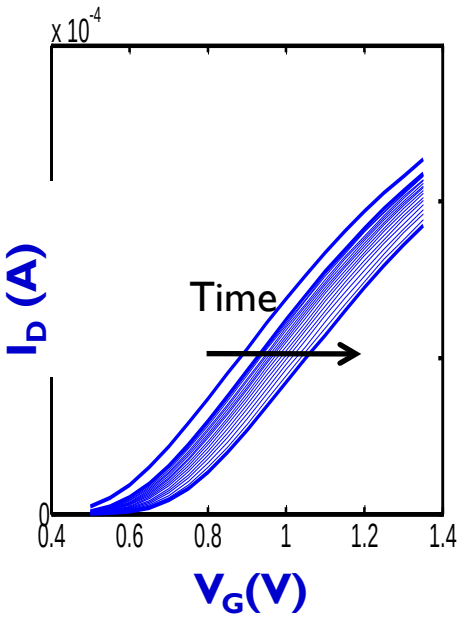

Setup

Measurement Sequence

Output

Measurement Flow Chart

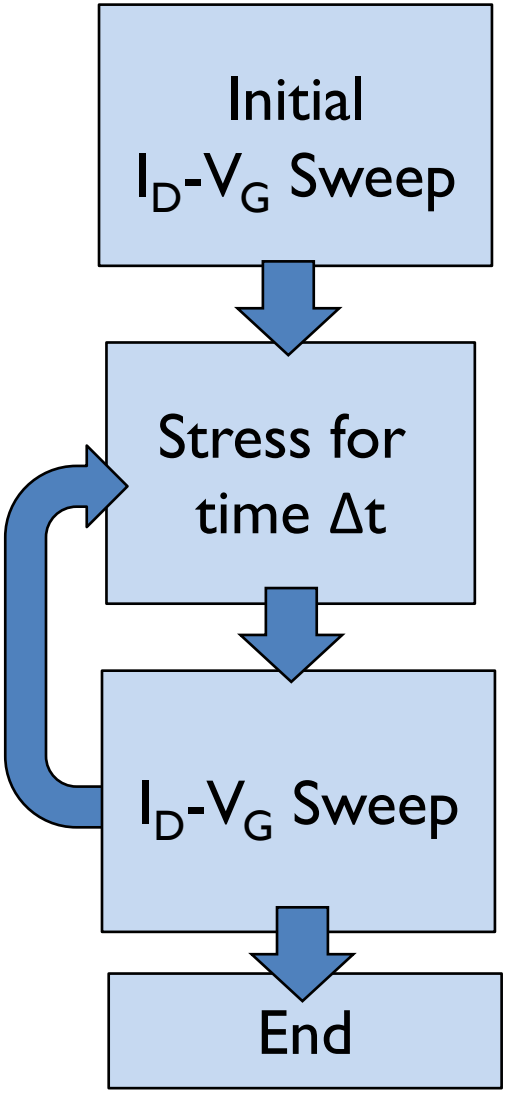

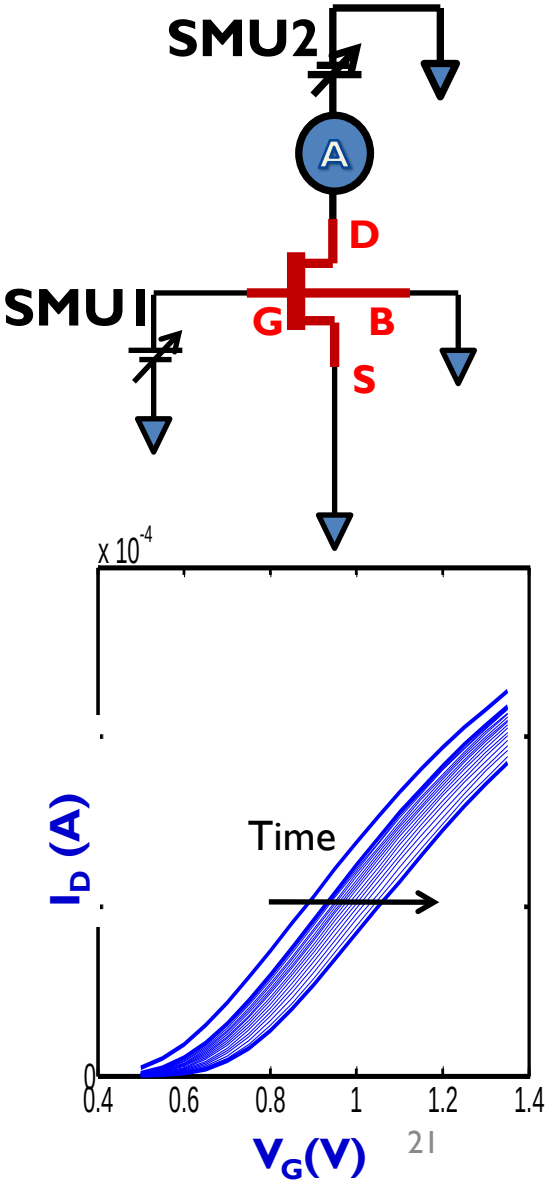

Measurement Code: MSM (I_D-V_G)

```
#include "keithley.h"
… …
//-------------------------------------------------------------------------------
//1. Settings
        devint();
        limiti(SMU1, 1e-1);  limitv(SMU1, 10);
// 2. Connect pins to SMUs, GND,..
        conpin(SMU1, gate_pin, 0);        conpin(SMU2, drain_pin, 0);
//-------------------------------------------------------------------------------
// 3. Apply stress
        forcev(SMU1,Vg_stress); forcev(SMU2, 0);
        delay(t);  devclr();
//-------------------------------------------------------------------------------
//4. Measure Id-Vg
 // Apply drain Voltage
        forcev(SMU2,V_drain);
        for (ct=1; ct<Vg_length; ct++)
        {       // Apply Gate Voltage
                 forcev(SMU1,V_gate(ct));
                // Measure Drain Current
                measi(SMU2, &i_meas(ct));
         }
//-------------------------------------------------------------------------------
```

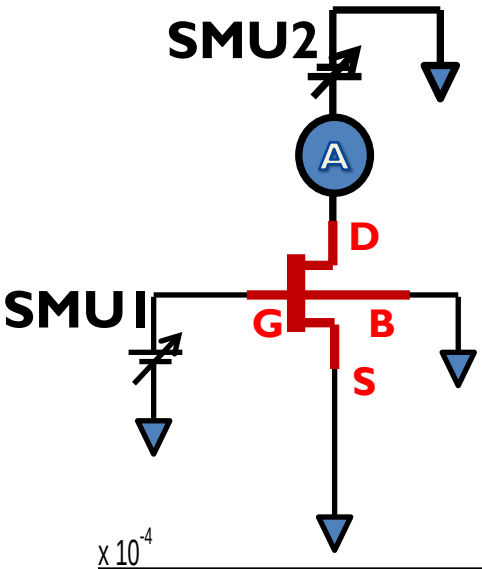

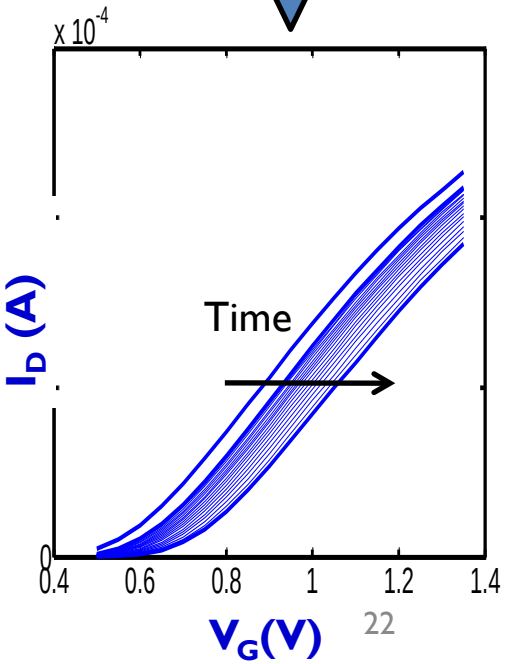

Charge pumping (CP)

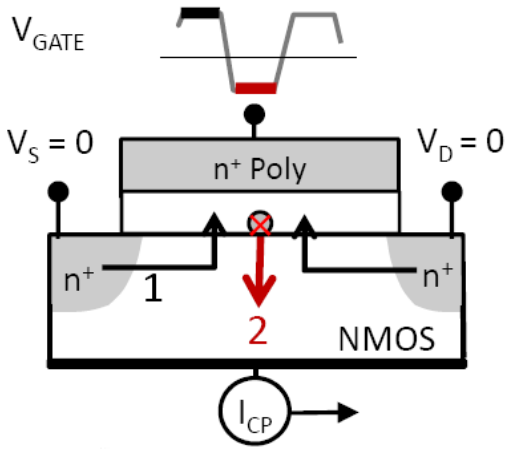

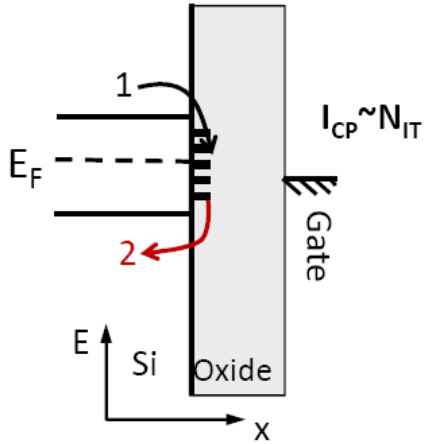

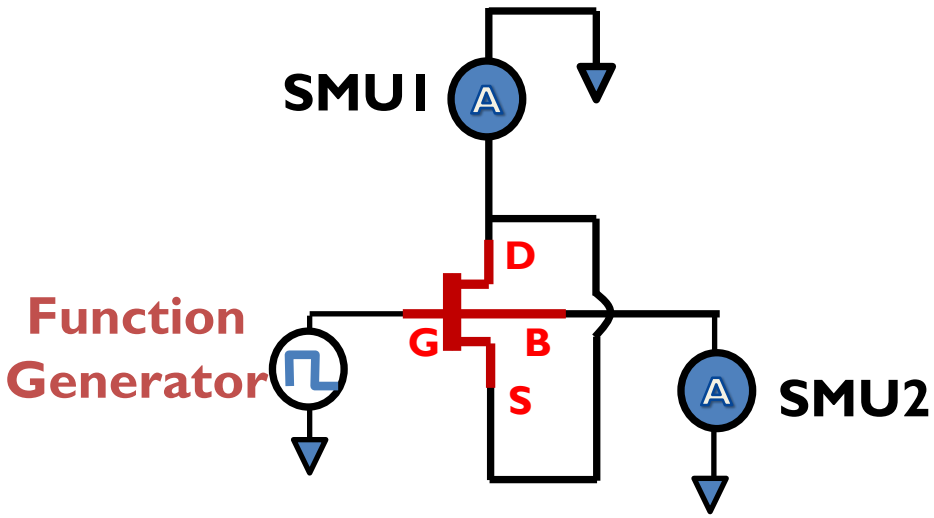

Circuit Schematic

Measurement Code (CP)

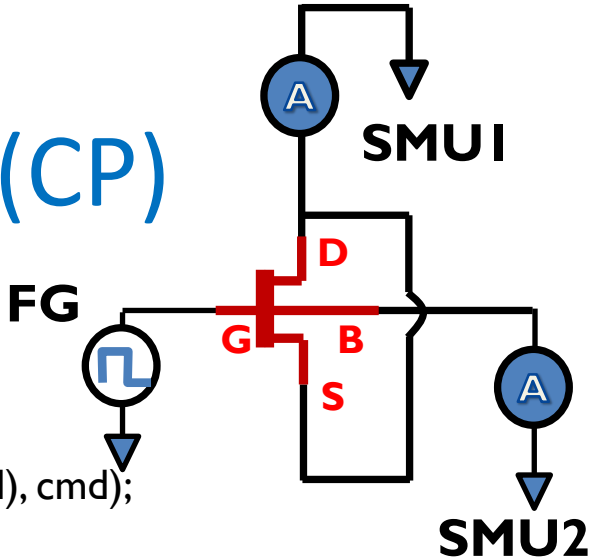


```
#include "keithley.h"
… …
//-------------------------------------------------------------------------------
//1. Settings
    devint();   limiti(SMU1, 1e-1);  limitv(SMU1, 10);
    sprintf(cmd, "*RST\n"); fcnstat = kibsnd(  fg,  -1, GPIBTIMO, strlen(cmd), cmd);
    ….
// 2. Connect pins to SMUs, GND, Pulse Generator
conpin(SMU1, drain_pin, source_pin, 0); conpin(SMU2, bulk_pin, 0);
conpin(GPI_fg, gate_pin, 0);
//-------------------------------------------------------------------------------
//3. Apply Voltage
  forcev(SMU1, 0);   forcev(SMU2, 0);  `

// Pulse Generator
sprintf(cmd, ":VOLT %fV\n", ampl);                  fcnstat = kibsnd(fg, -1, GPIBTIMO, strlen(cmd), cmd);
sprintf(cmd, ":VOLT:OFFS %fV\n", offset);          fcnstat = kibsnd(fg, -1, GPIBTIMO, strlen(cmd), cmd);
sprintf(cmd, ":FREQ %f\n", freq_CP);                fcnstat = kibsnd(fg, -1, GPIBTIMO, strlen(cmd), cmd);
sprintf(cmd, ":FUNC:PULS:DCYC %f\n", 50);           fcnstat = kibsnd(fg, -1, GPIBTIMO, strlen(cmd), cmd);
sprintf(cmd, ":FUNC:PULS:TRAN %le\n", 1e-7);        fcnstat = kibsnd(fg, -1, GPIBTIMO, strlen(cmd), cmd);
sprintf(cmd, ":OUTP ON\n");                         fcnstat = kibsnd(fg, -1, GPIBTIMO, strlen(cmd), cmd);
```

Measurement Code (CP)…contd.

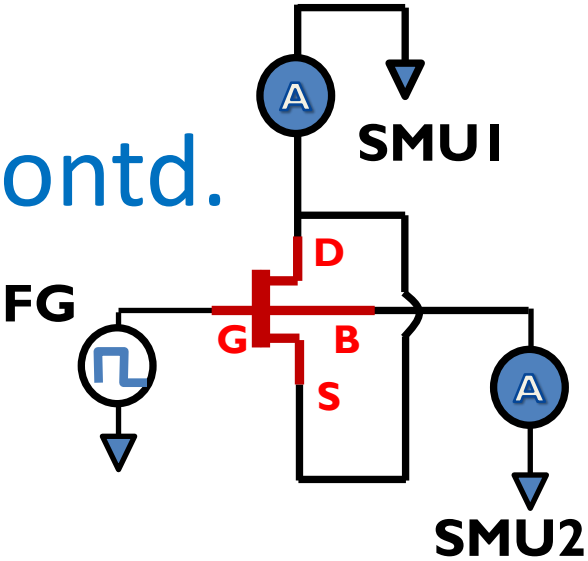


```
//-----------------------------------------------------------------------------------
 //4. Measure CP current

measi(SMU1, &icp1);
measi(SMU2, &icp2);


//-----------------------------------------------------------------------------
 //5. Reset Instruments

sprintf(cmd, ":OUTP OFF\n");      fcnstat = kibsnd(fg, -1, GPIBTIMO, strlen(cmd), cmd);
clrcon();

 //6. Save data

fprintf(fp_out, "icp1= %e A, icp2= %e A", icp1, icp2);
```

Outline

1. Different reliability measurements
2. Measurement setup
3. Example Codes
4. **Data analysis**
5. Conclusion

Fast Measurement Issue: Noise

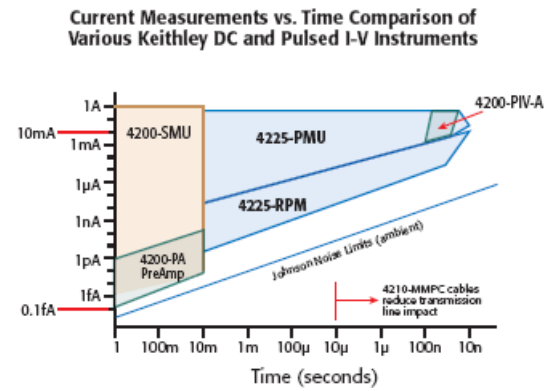

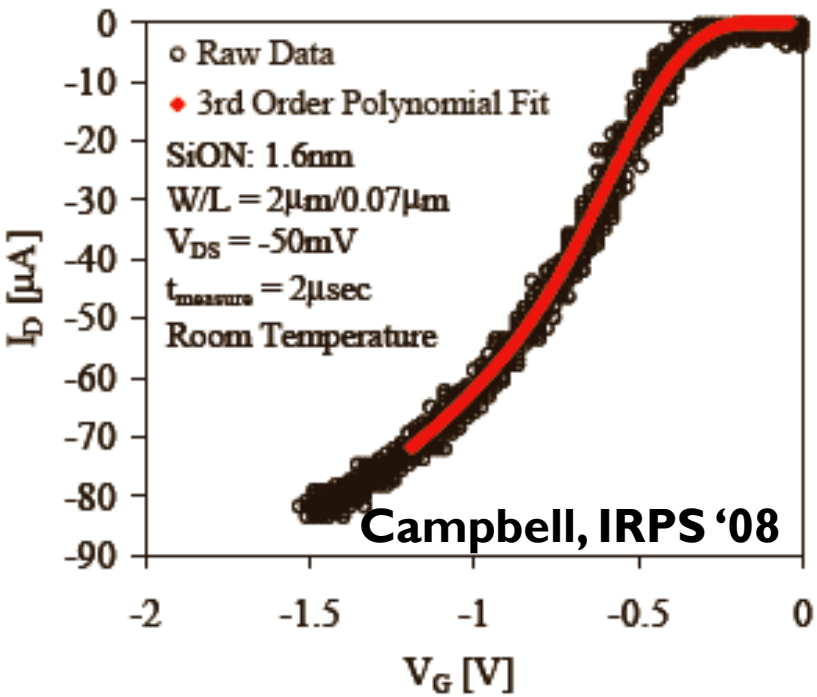

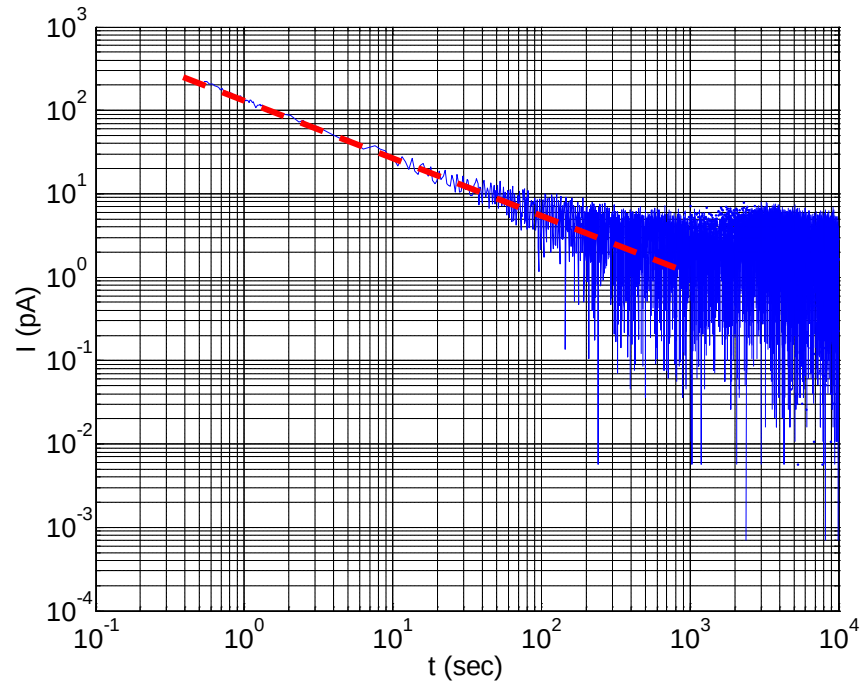

Extraction of V_T and ΔV_T

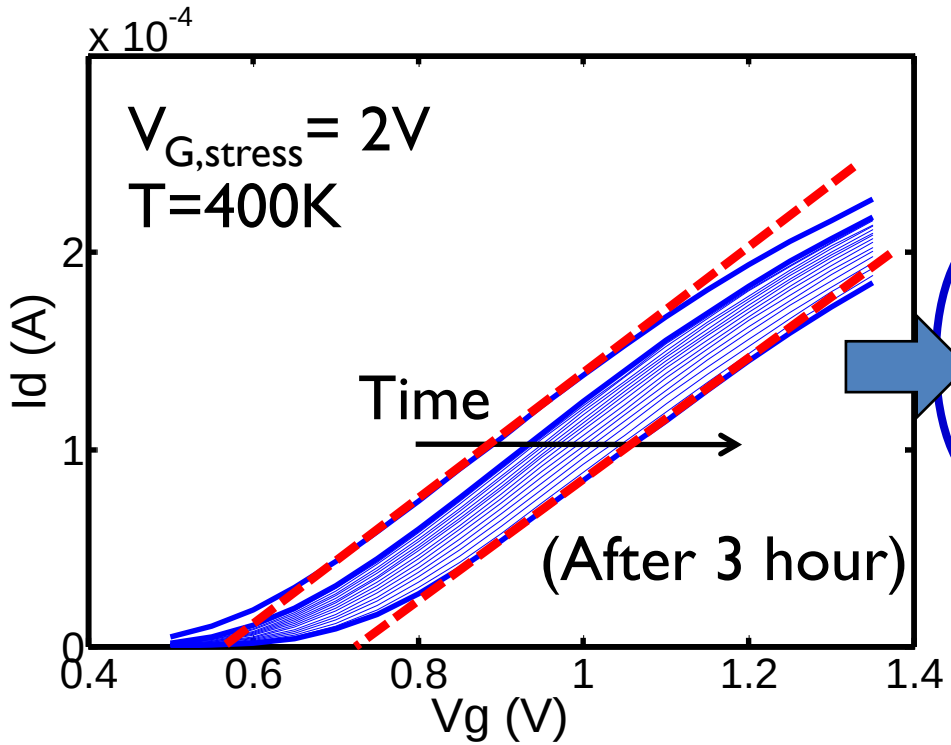

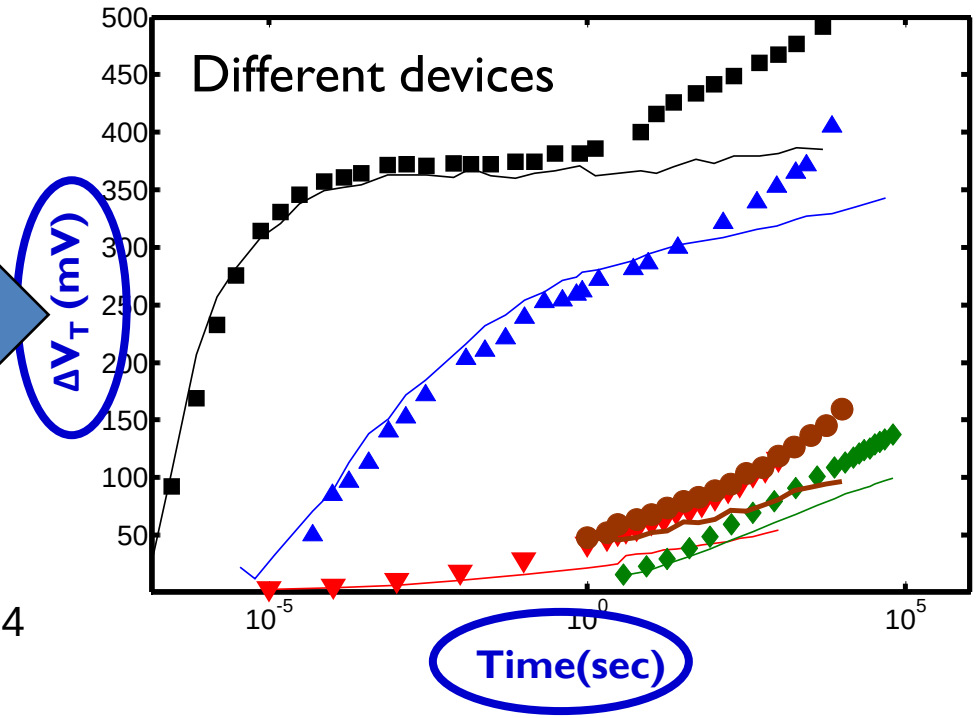

Maximum g_m , ….other method..

Temperature Activation

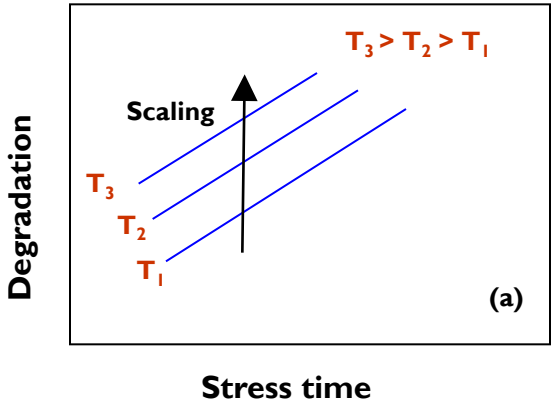

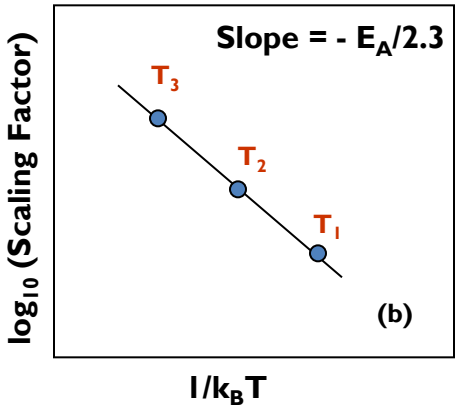

$$\Delta V_T \sim exp\left(-\frac{E_A}{k_BT}\right)$$

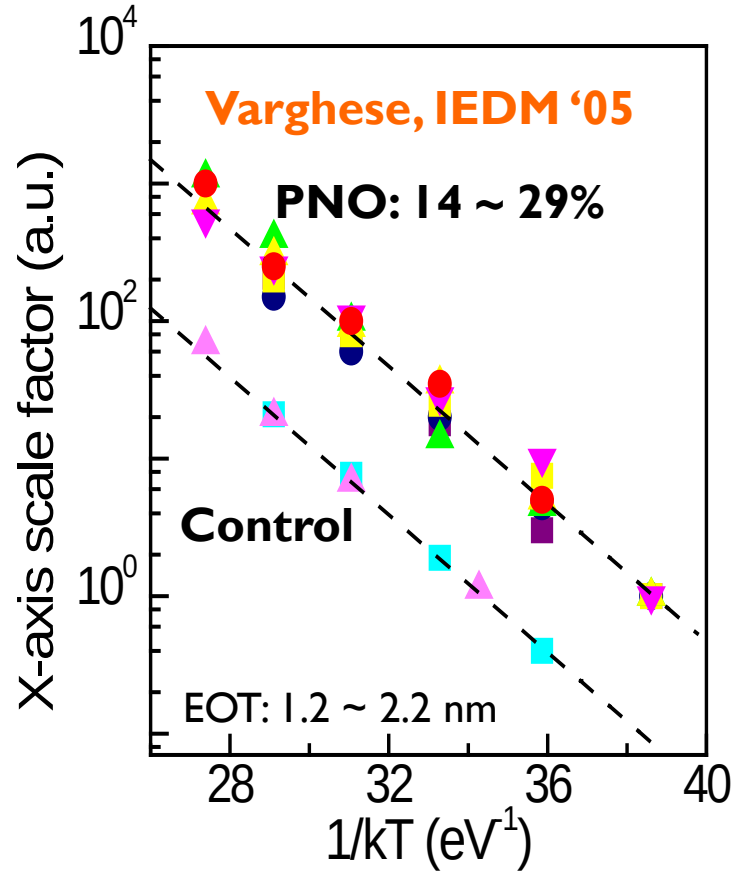

E_A (avg.) ~ 0.58 eV

- Temperature dependent data
  - a) Data scaled along X/Y-axis

    Scaling factors: $S_1 = 1, S_2, S_3$
  - b) $\log_{10}S$ vs. (1/kT) drawn

    Slope = $-E_A/2.3$
- Wide range of temperature (27 ^{0}C ~ 150 ^{0}C)

NBTI Lifetime & Safe Condition

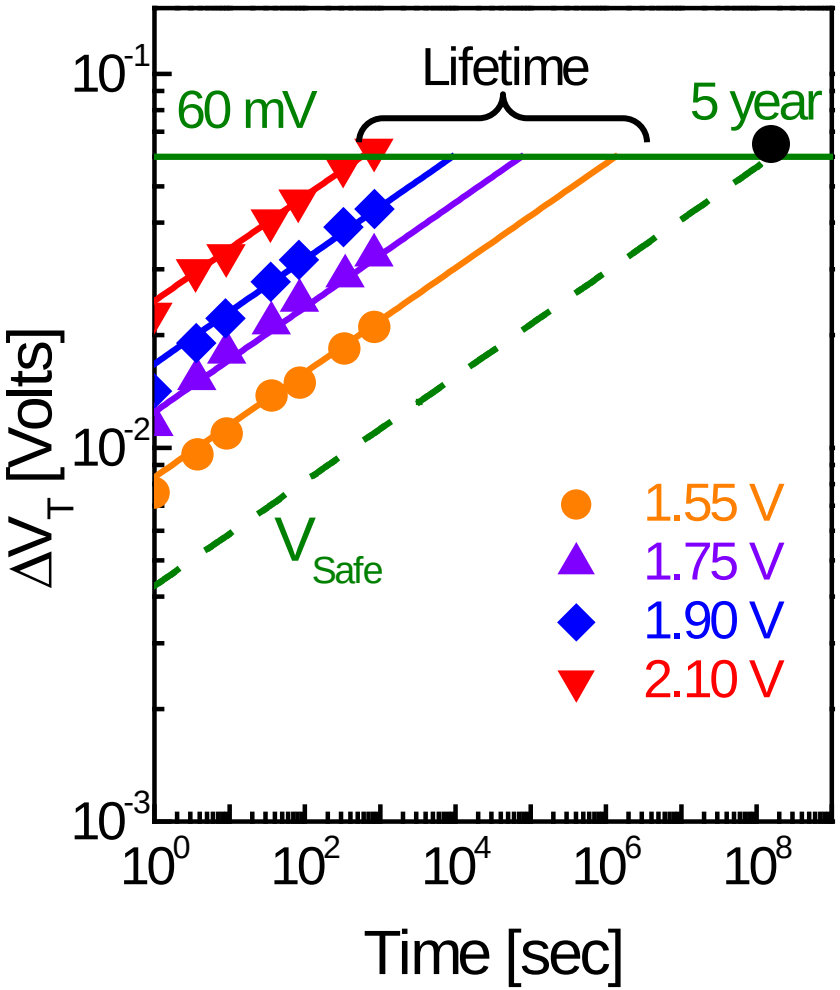

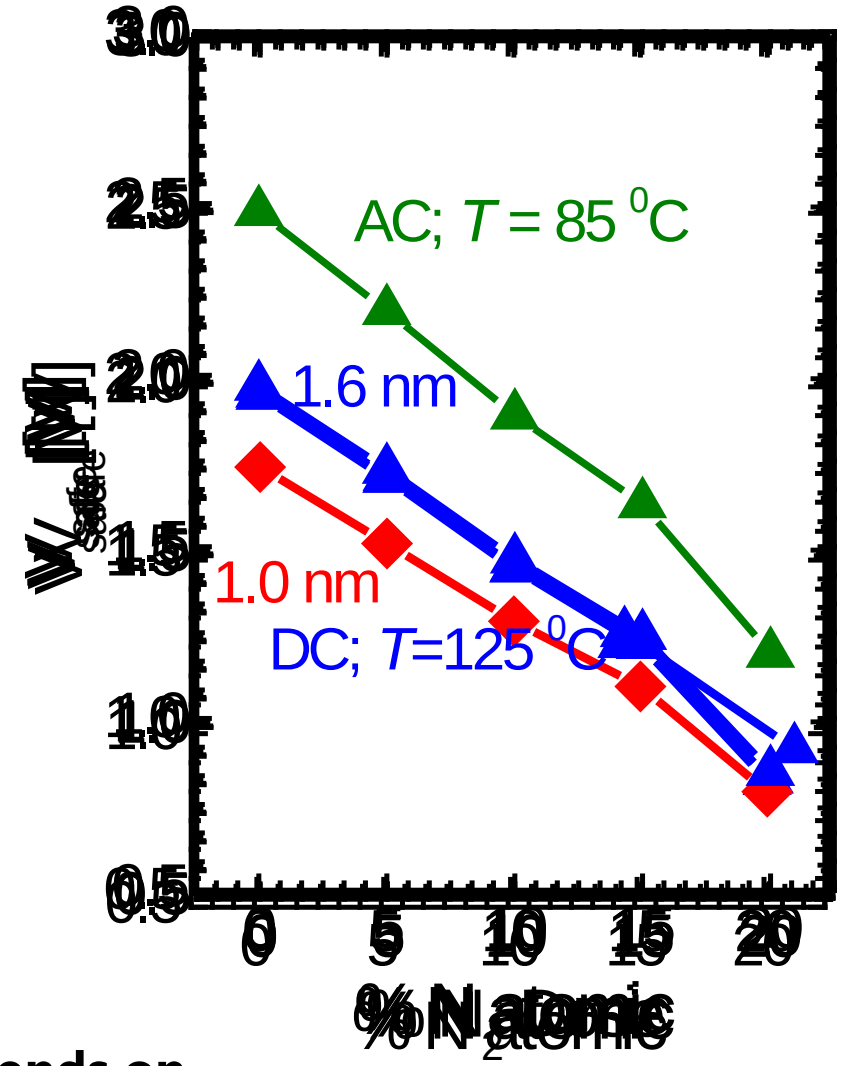

V_{safe} depends on

N_2 dose Temperature DC/AC

Conclusions

We have answered the following questions:

- Why precision measurements are so important in reliability modeling,
- Characteristics of reliability measurements
- What are the different components for a measurement setup,
- How to perform SMS-I_DV_G and Charge pumping measurements
- How to use the raw data to extract useful information