Fundamentals of Nanoelectronics

Prof. Supriyo Datta
ECE 453
Purdue University

11.03.2004

Lecture 27: Minimum Resistance of a Quantum Wire

Ref. Chapter 6.3

Network for Computational Nanotechnology

NCN
nanoHUB
online simulations and more

Quantum Well

00:05

- Today we want to talk about the maximum current that can run through a quantum wire. Is there a limit? If there is, what determines that limit?
- The idea of Q. Wire comes from confinement of a large solid. This confinement is categorized in the box based on the number of dimensions that are confined.

$$\text{Bulk Solid}: E(k_x, k_y, k_z)$$
$$\text{Q. Well}: \quad E_\nu(k_x, k_y)$$
$$\text{Q.Wire}: \quad E_{\nu,\nu'}(k_x)$$
$$\text{Q.Dot}: \quad E_{\nu,\nu',\upsilon''}$$

For electronic properties we are interested in the levels close to the Fermi level. Near the Fermi level we can approximate the dispersion relation. ↓

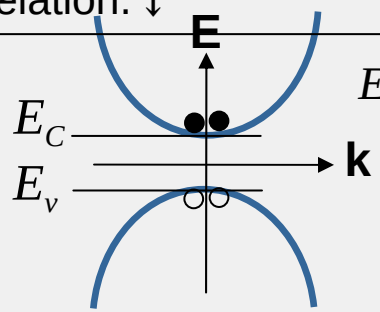

$$E = E_C + \frac{h^2}{2m_C}\left(k_x^2 + k_y^2 + k_z^2\right)$$

- Instrumental in making semiconductor lasers and field effect transistors. ↓

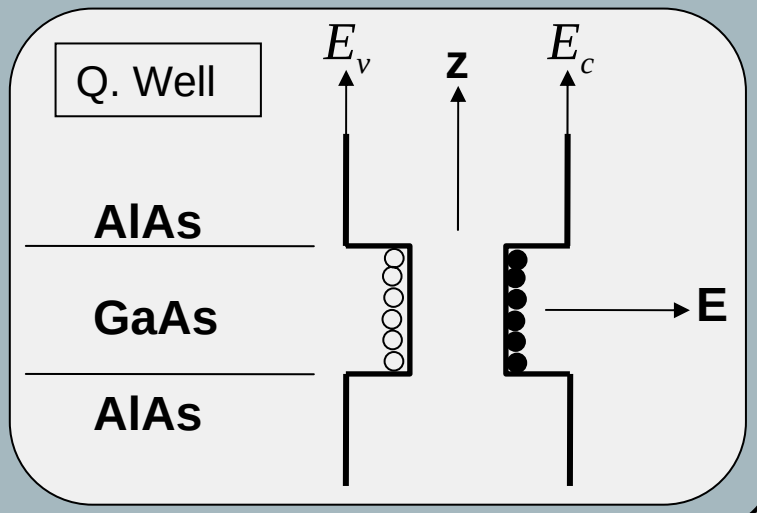

Subbands of Quantum Well

10:00

- The wavefunction can be written as:

$$\psi \propto \sin k_z z \quad \text{where} \quad k_z = v\pi / L_z$$

- Which gives us the subbands:

$$E_v(k_x, k_y) = E_C + \frac{v^2 \hbar^2 \pi^2}{2 m_C L_z^2} + \frac{\hbar^2}{2 m_C}\left(k_x^2 + k_y^2\right)$$

Confinement in 1 direction

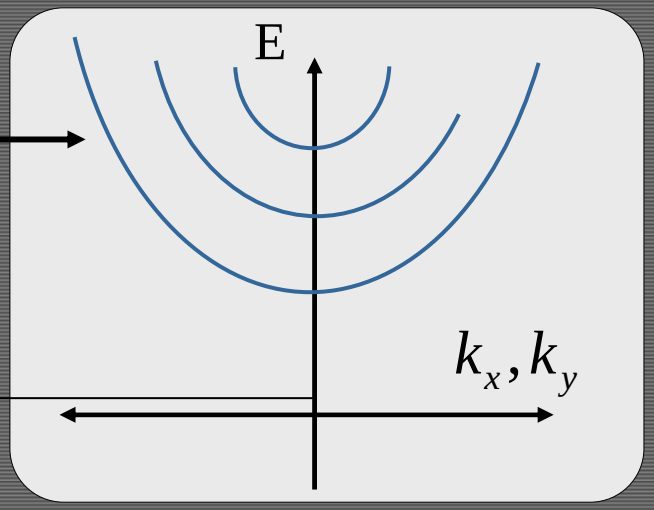

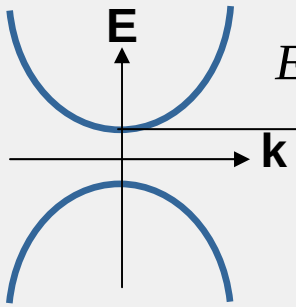

$$E = E_C + \frac{h^2}{2m_C}\left(k_x^2 + k_y^2 + k_z^2\right)$$

No Confinement

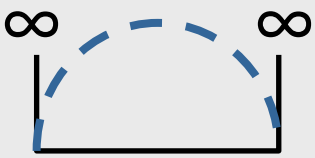

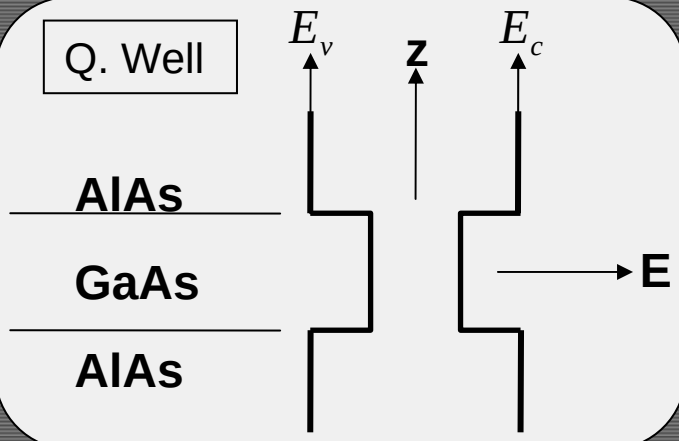

Quantum Wire

- If we take a Q. well which is confined in the z direction and very large in the x, y plane and confine it yet in another direction, take y for instance, then what we have is a Q. wire. The subbands are then given by:

$$E_{v,v'}(k_x) = E_C + \frac{v^2\hbar^2\pi^2}{2m_C L_z^2} + \frac{v'^2\hbar^2\pi^2}{2m_C L_y^2} + \frac{\hbar^2}{2m_C}k_x^2$$

- For the quantum wire we get various subbands corresponding to different values of υ, υ'
- The quantized wave functions in the y and z directions look like →

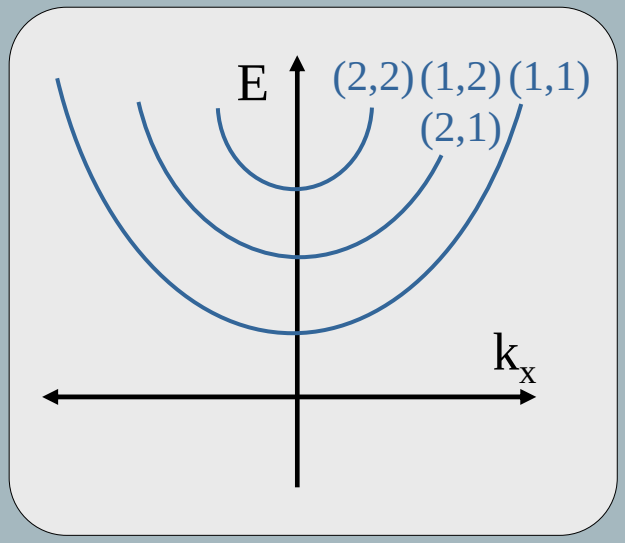

Quantum Wire: DOS

• Now, what does the density of states look like for a quantum wire? Clearly, as with the carbon nanotube, the density of states peaks where each subband is crossed.

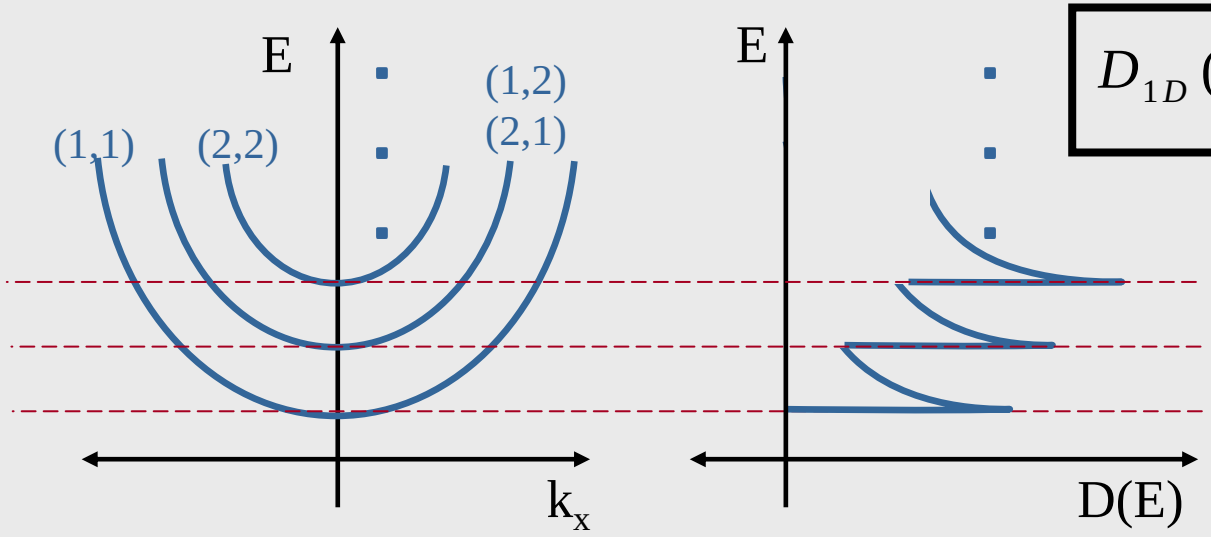

$$D_{1D}(E) = \frac{1}{\pi dE / dk}$$

Boundary Conditions: Two Different Cases

20:58

- Last day we discussed what happens to DOS when one makes a nanotube out of Graphene.

$$\begin{array}{lll} \text{Bulk Solid}: & E(k_x, k_y, k_z) & \\ \text{Q. Well}: & E_\nu(k_x, k_y) \Rightarrow \text{Graphene} & \\ & \downarrow & \\ \text{Q.Wire}: & E_{\nu,\nu'}(k_x) & \text{Nanotube} \\ \text{Q.Dot}: & E_{\nu,\nu',\upsilon''} & \end{array}$$

- In that problem our assumption of periodic boundary conditions was actually exact for Carbon Nanotubes.

$$k_y = (2\pi / L_y)\upsilon: \quad \text{EXACT}$$

- How ever for today's problem if we assume the potential walls are very large, we have:

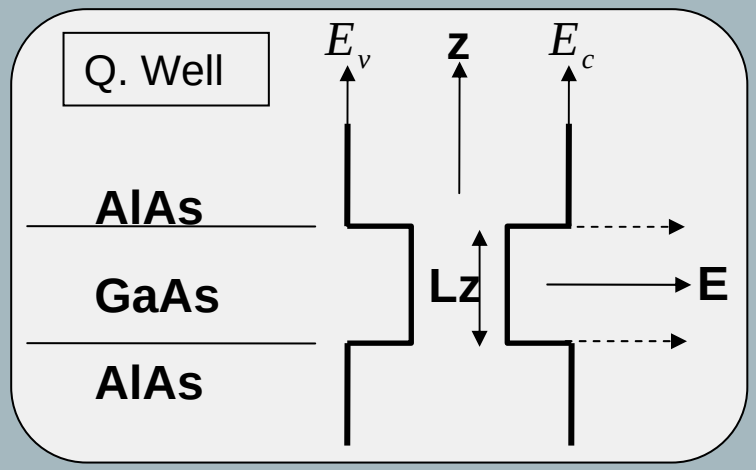

$$k_z = (\pi / L_z)\upsilon: \quad \text{Approximation}$$

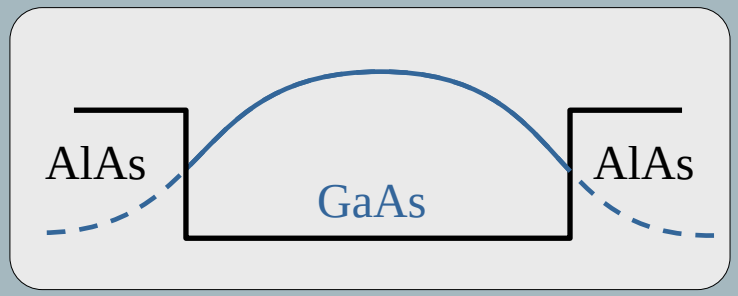

Electron Density Velocity

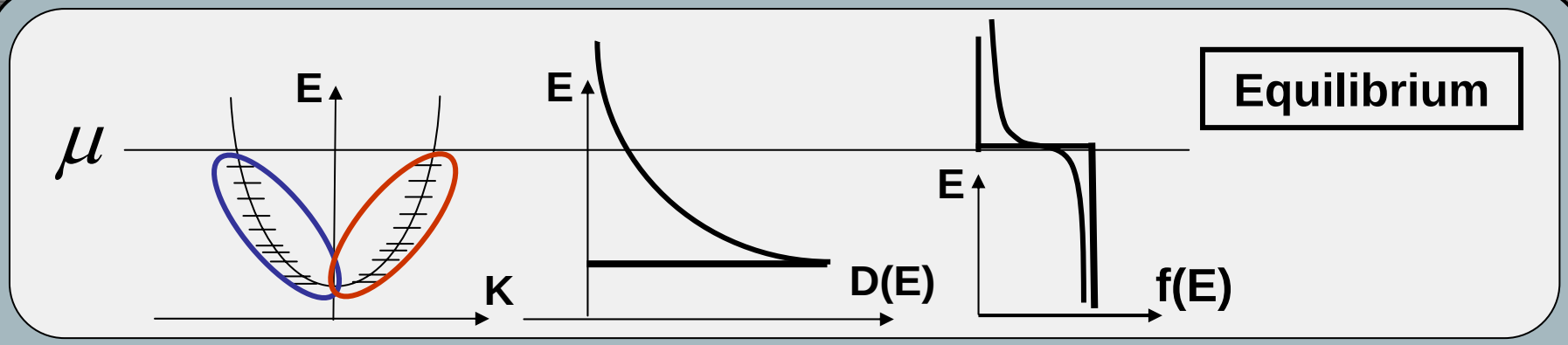

- $E_k = \varepsilon + \dfrac{\hbar^2 k^2}{2m_c}$
- $f(E) = \dfrac{1}{1+e^{(E-\mu)/kT}}$
- $N = \sum_k f(E_k) = 2\int \dfrac{dk.L}{2\pi} f(E_k) \Rightarrow \dfrac{N}{L} = 2\int \dfrac{dk}{2\pi} f(E_k) = 2\int \dfrac{dE_k}{2\pi \dfrac{dE_k}{dk}} f(E_k)$

- At equilibrium the current carried by red states is equal in magnitude and opposite in sign to blue states → no net current at equilibrium

$$\hbar v_k = \frac{dE}{dk} = \frac{\hbar^2 k}{m_c}$$

Current Carried By a Quantum Wire

38:15

- Under certain conditions we can have a picture like this where the amount states carrying positive current is more than the ones carrying negative current. Their algebraic sum we'll give us the net current which is due to extra positive k states shaded in the figure:

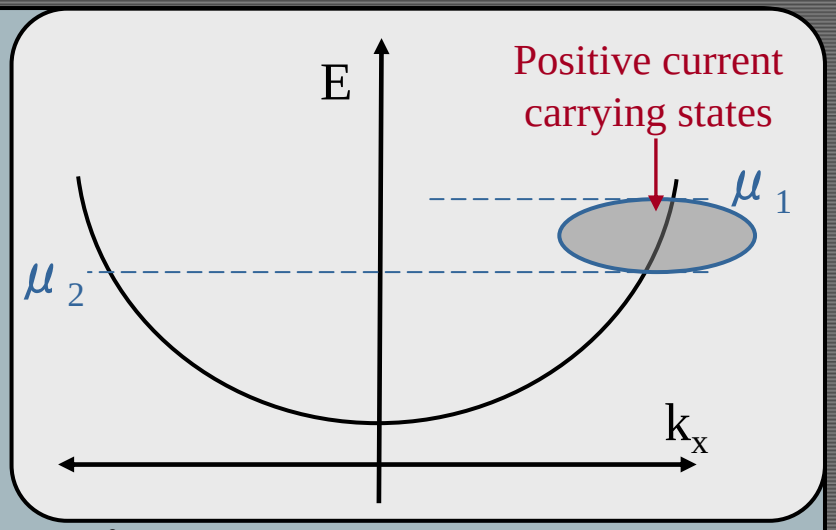

- $$I_{net} = q\frac{N}{L}v = q\int_0^\infty \frac{dk}{2\pi} v_k f(E_k) = \frac{q}{h}\int_0^\infty \frac{dk}{2\pi}\frac{dE_k}{dk} f(E_k) = \frac{q}{h}\int_0^\infty dE_k f(E_k) = \frac{40\mu A}{eV}$$

- In general we have many subbands. So we have to multiply by the number of subbands that are available in the energy range of interest.

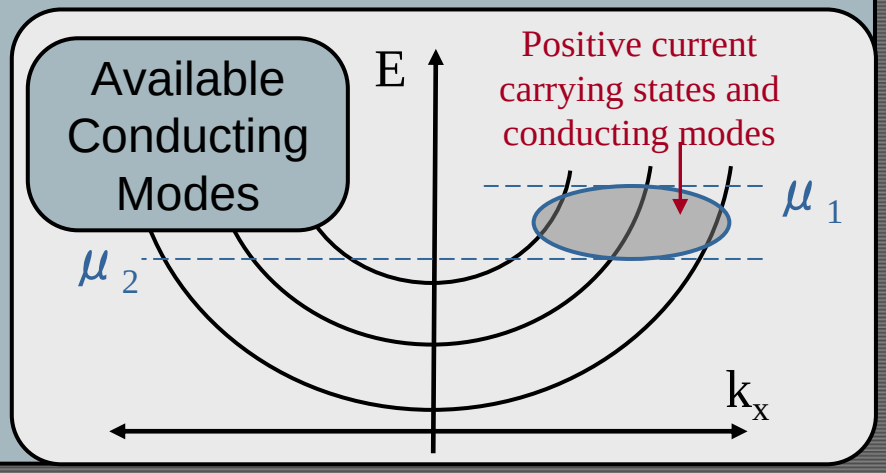

Quantum of Conductance

- Let's put some numbers in…

$$\frac{q}{h} = \frac{1.6\times10^{-19}\,coul}{6.63\times10^{-34}\,J-\sec}1.6\times10^{-19}\,\frac{J}{eV} = \frac{2.56}{6.63}\times10^{-4}\,\frac{A}{eV} = \frac{256}{6.63}\frac{\mu A}{eV}$$

$$\boxed{\frac{q}{h} \cong 40\,\frac{\mu A}{eV}}$$

- What this quantity means is that the current carried by a quantum wire having one mode is this value multiplied by the energy range of interest.