ECE 656: Electrothermal Transport in Semiconductors Fall 2015

Landauer Approach:

Fermi Window and Current

Professor Mark Lundstrom

Electrical and Computer Engineering
Purdue University
West Lafayette, IN USA

10/1/15

Landauer Approach

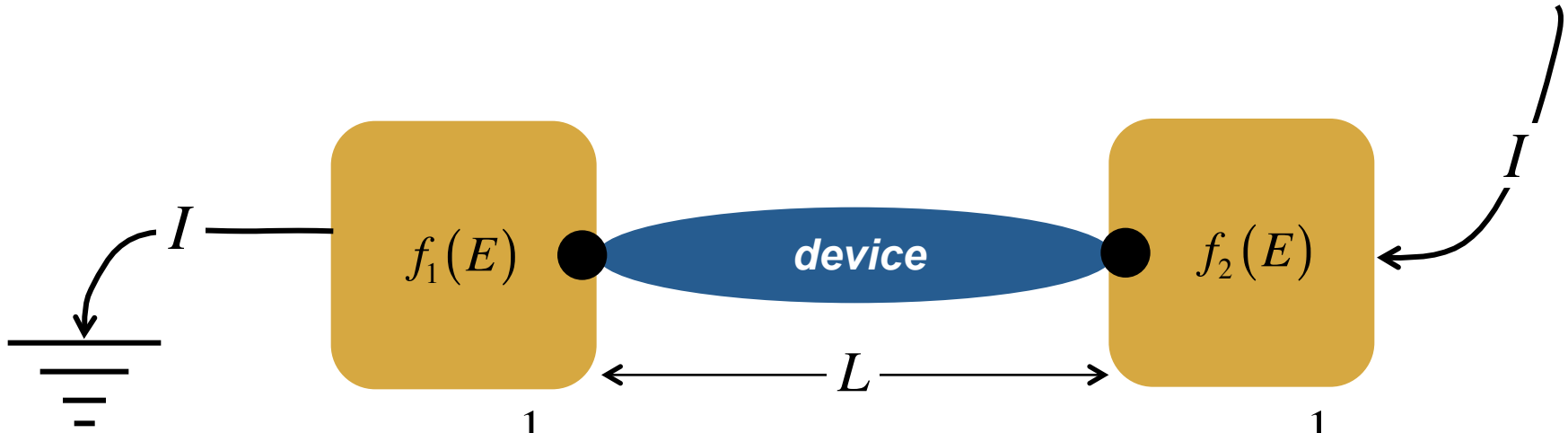

$$f_1(E) = \frac{1}{1+e^{(E-E_{F1})/k_BT}} \qquad f_2(E) = \frac{1}{1+e^{(E-E_{F2})/k_BT}}$$

$$I = \frac{2q}{h}\int \mathcal{T}(E)M(E)(f_1 - f_2)dE$$

transmission, modes (channels), differences in Fermi functions

Channels (modes)

$$M_{1D}(E) = \frac{h}{4}\langle \upsilon_x^+ \rangle D_{1D}(E)$$

$$M_{2D}(E)W = W\frac{h}{4}\langle \upsilon_x^+ \rangle D_{2D}(E)$$

$$M_{3D}(E)A = A\frac{h}{4}\langle \upsilon_x^+ \rangle D_{3D}(E)$$

Transmission

$$\mathcal{T}(E) = \frac{\lambda(E)}{\lambda(E) + L}$$

λ is the "mean-free-path for backscattering"

1) Diffusive: $L >> \lambda \quad \mathcal{T} = \frac{\lambda}{L} << 1$

2) Ballistic: $L << \lambda \quad \mathcal{T} = 1$

3) Quasi-ballistic: $L \approx \lambda \quad \mathcal{T} < 1$

Fermi window

$$I = \frac{2q}{h}\int \mathcal{T}(E)M(E)(f_1 - f_2)dE$$

Fermi window:
The range of energies over which $(f_1 - f_2) \neq 0$

Differences in the Fermi levels

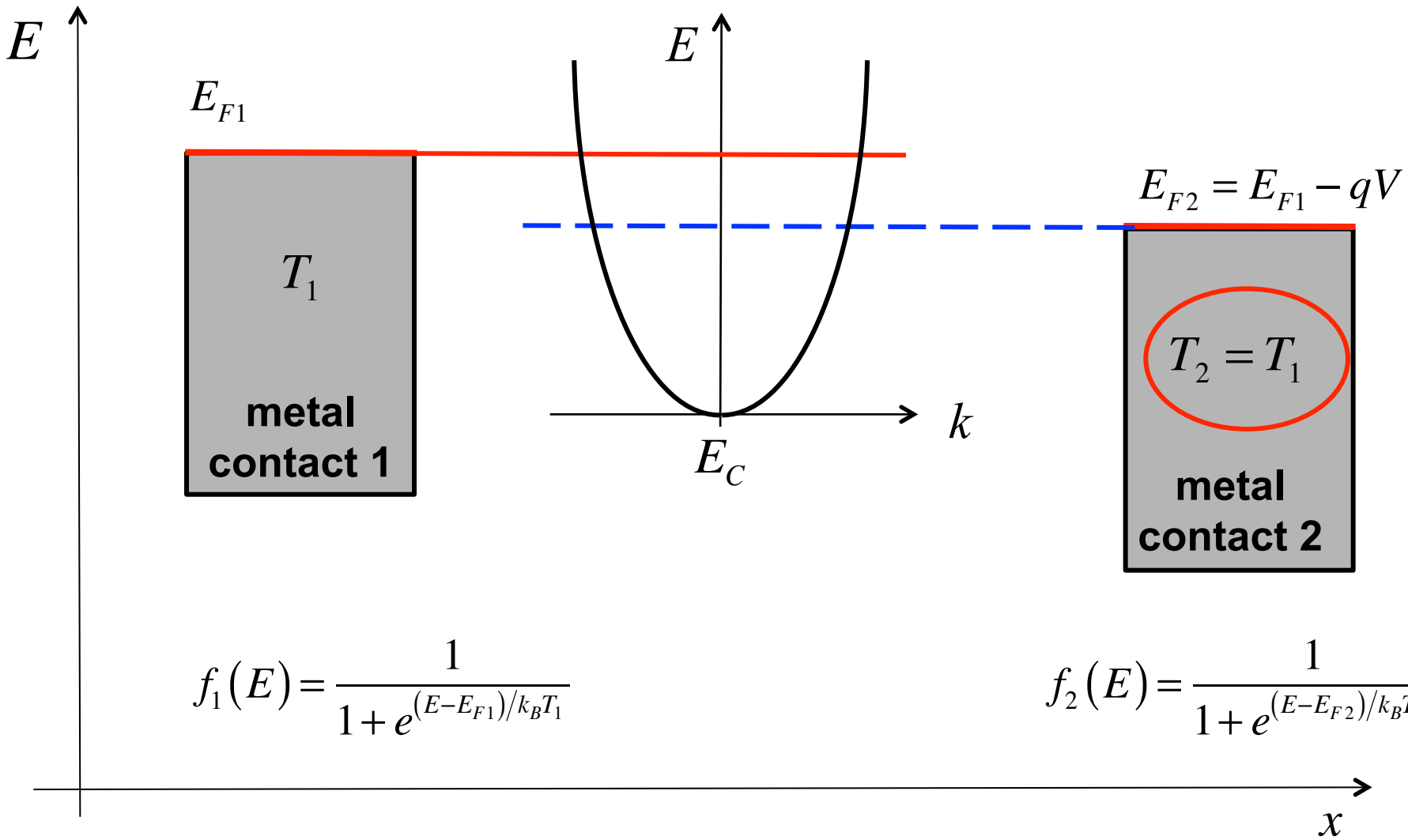

$$f_1(E) = \frac{1}{1 + e^{(E - E_{F1})/k_B T_1}}$$

$$f_2(E) = \frac{1}{1 + e^{(E - E_{F2})/k_B T_2}}$$

Differences in the Fermi levels

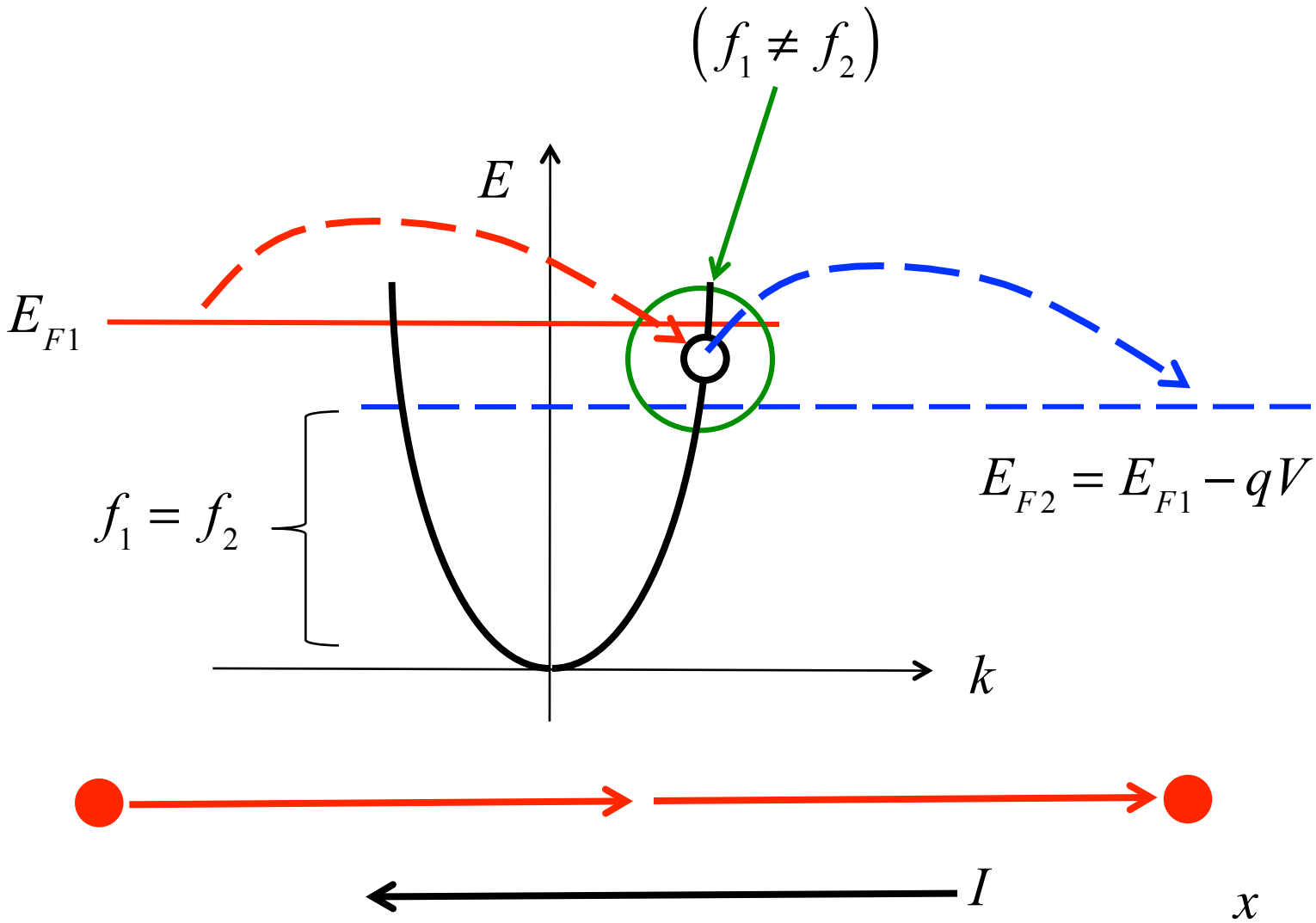

Fermi window: Large bias

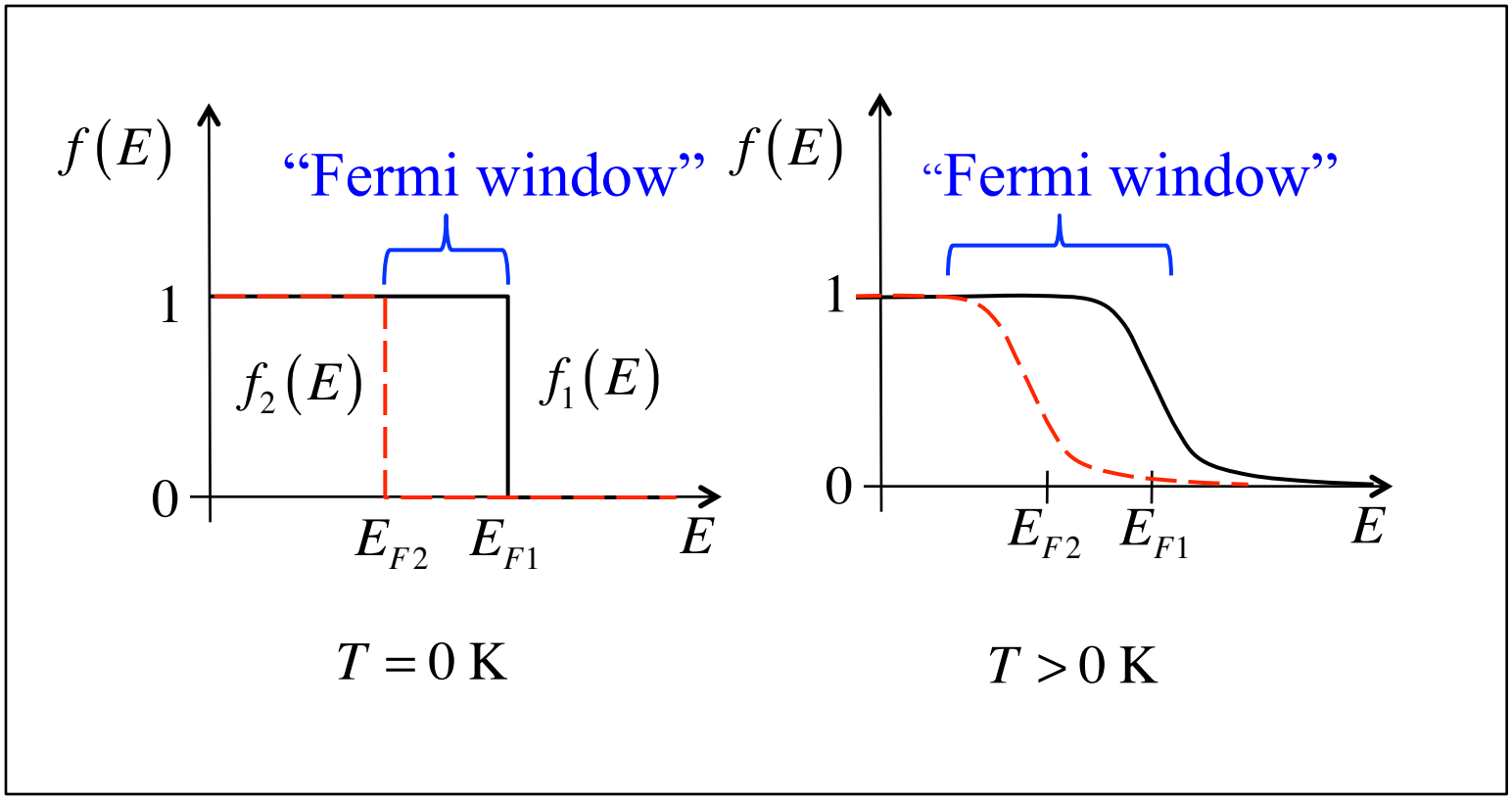

Fermi window: small bias

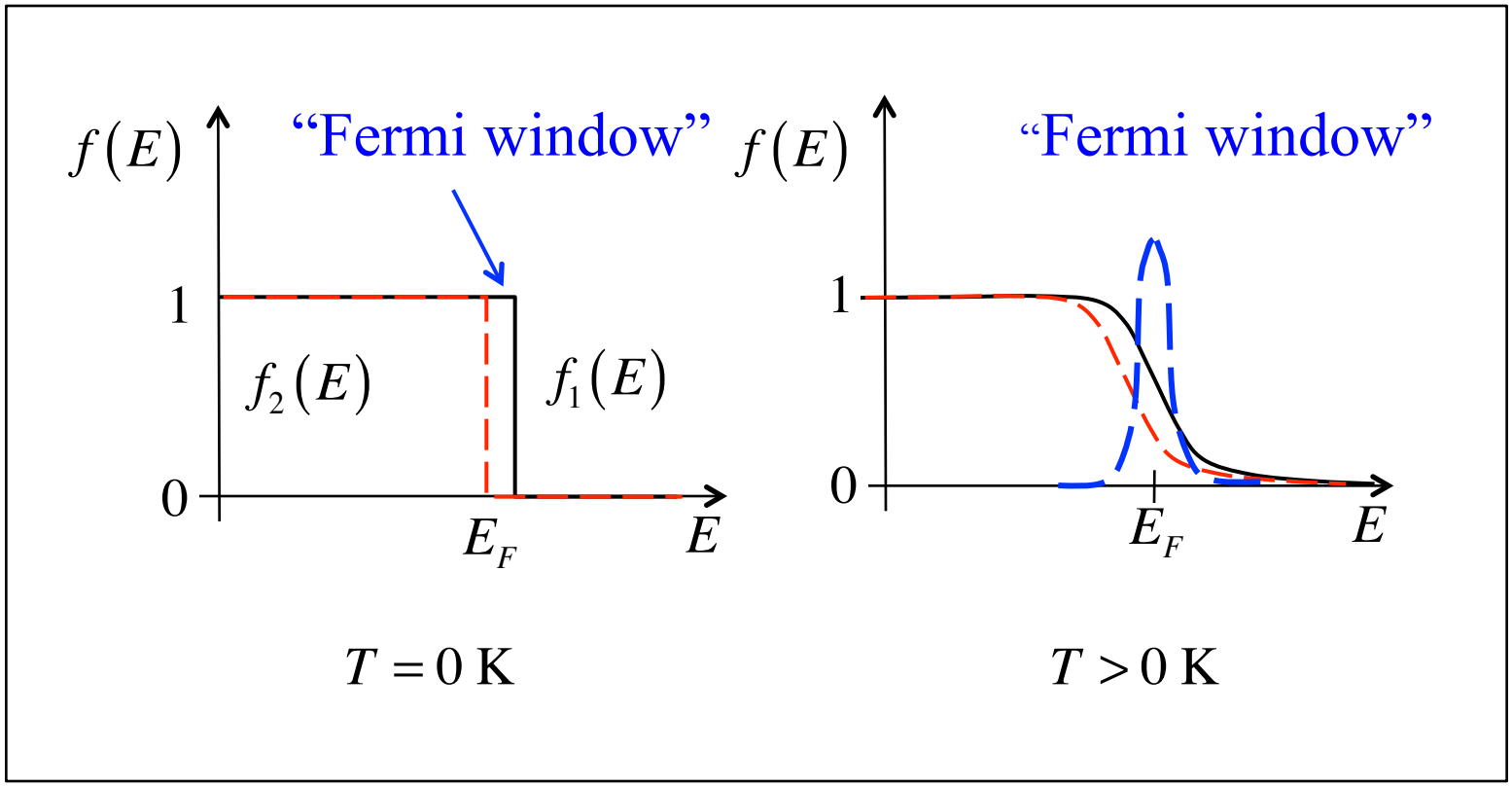

Small voltage (linear response)

$$I = \frac{2q}{h}\int \mathcal{T}(E)M(E)\left(f_1(E) - f_2(E)\right)dE$$

$$f_1(E) = \frac{1}{1+e^{(E-E_{F1})/k_BT}}$$

$$f_2(E) \approx f_1(E) + \frac{\partial f_1}{\partial E_F}\delta E_F$$

$$f_2(E) \approx f_1(E) + \left(-\frac{\partial f_1}{\partial E}\right)\delta E_F$$

$$f_2(E) \approx f_1(E) + \left(-\frac{\partial f_1}{\partial E}\right)(-qV)$$

$$f_1(E) - f_2(E) = \left(-\frac{\partial f_1}{\partial E}\right)(qV)$$

Fermi window: small bias

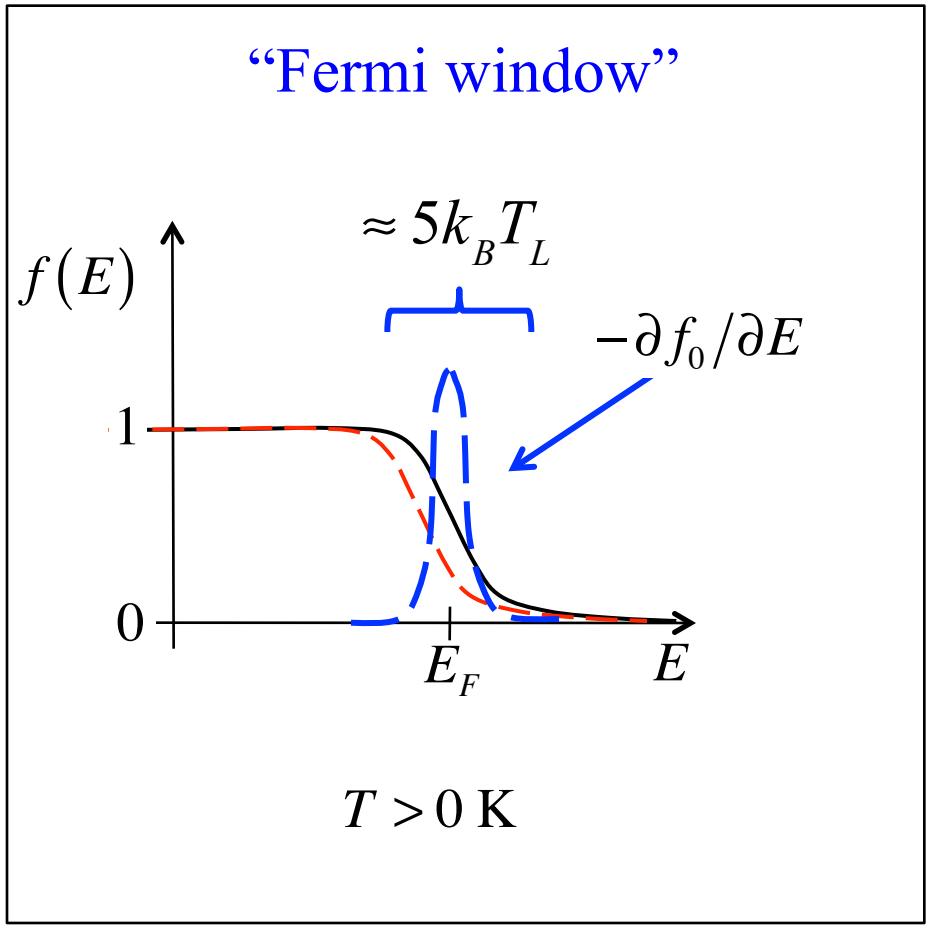

$$W_F(E) = \left(-\frac{\partial f_0}{\partial E}\right)$$

$$\int W_F(E)\,dE = 1$$

$$f_1(E) - f_2(E) = W_F(E)(qV)$$

Near-equilibrium conductance

$$I = \frac{2q}{h}\int \mathcal{T}(E)M(E)\left(\underline{f_1(E) - f_2(E)}\right)dE$$

$$f_1(E) - f_2(E) = \left(-\frac{\partial f_1}{\partial E}\right)(qV)$$

$$I = GV \quad \text{A}$$

$$G = \frac{2q^2}{h}\int \mathcal{T}(E)M(E)\left(-\frac{\partial f_0}{\partial E}\right)dE \quad \text{S}$$

Quantum of conductance

$$G = \frac{2q^2}{h}\int \mathcal{T}(E)M(E)\left(-\frac{\partial f_0}{\partial E}\right)dE \ \ \mathrm{S}$$

$T = 0\ \mathrm{K}$:

$$\left(-\frac{\partial f_0}{\partial E}\right) = \delta(E_F)$$

$$G(T = 0\ \mathrm{K}) = \frac{2q^2}{h}\mathcal{T}(E_F)M(E_F)$$

$$M(E) = WM_{2D}(E) = Wg_v\frac{\sqrt{2m^*E}}{\pi\hbar}$$

For large *W*, *M* is ~ W

For small *W*, *M* comes in discrete units.

Quantized conductance

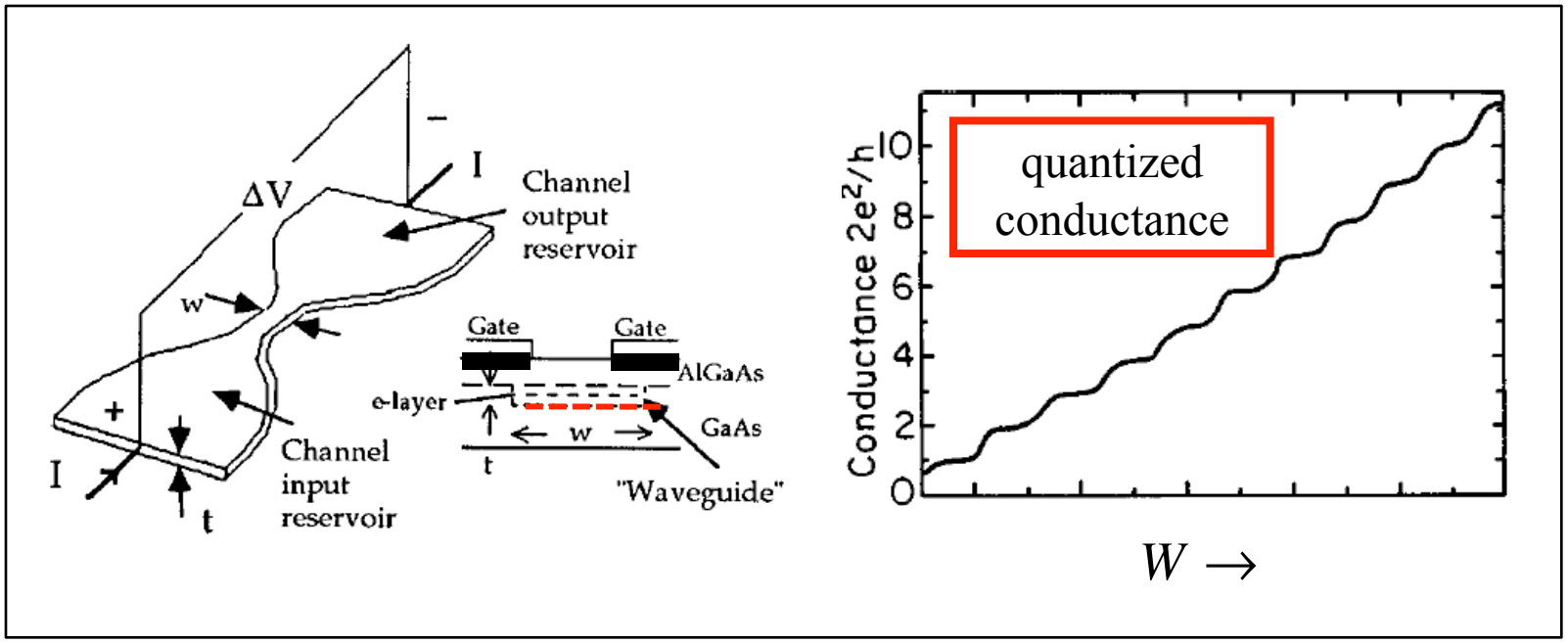

D. Holcomb, *American J. Physics*, **67**, pp. 278-297 1999.
Data from: B. J. van Wees, et al., *Phys. Rev. Lett*. **60**, 848851, 1988.

Differences in the Fermi levels (constant V)

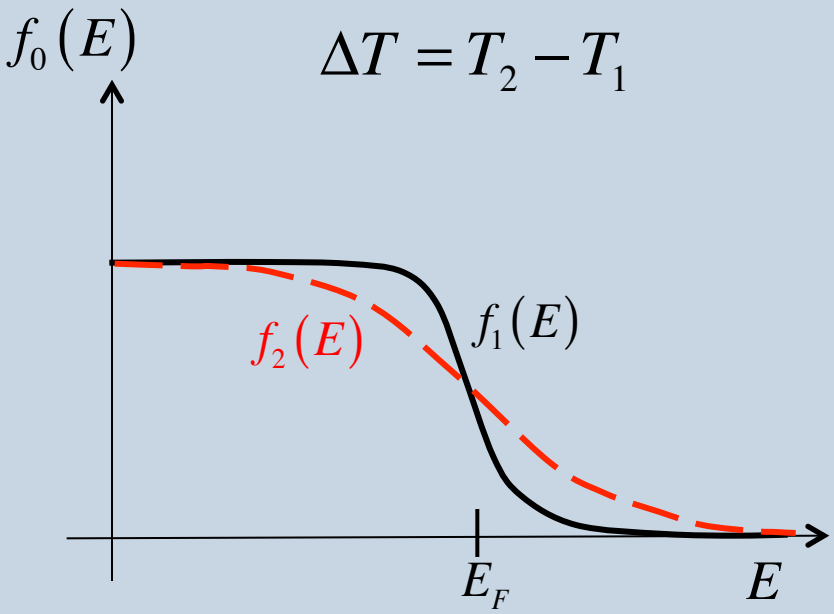

$|f_1 - f_2| > 0$ so current flows, but the sign depends on whether the states are located above or below E_F (n-type or p-type).

near-equilibrium
(small temperature difference)

$$(f_1 - f_2) \approx -\left(-\frac{\partial f_0}{\partial E}\right)\frac{(E - E_F)}{T}\Delta T$$

$$(f_1 \approx f_2 \approx f_0)$$

What about holes?

Landauer expression for electrons:

$$I = \frac{2q}{h} \int \mathcal{T}(E) M(E) \left(f_1 - f_2 \right) dE$$

Do we need a Landauer expression for holes?

N-type conduction

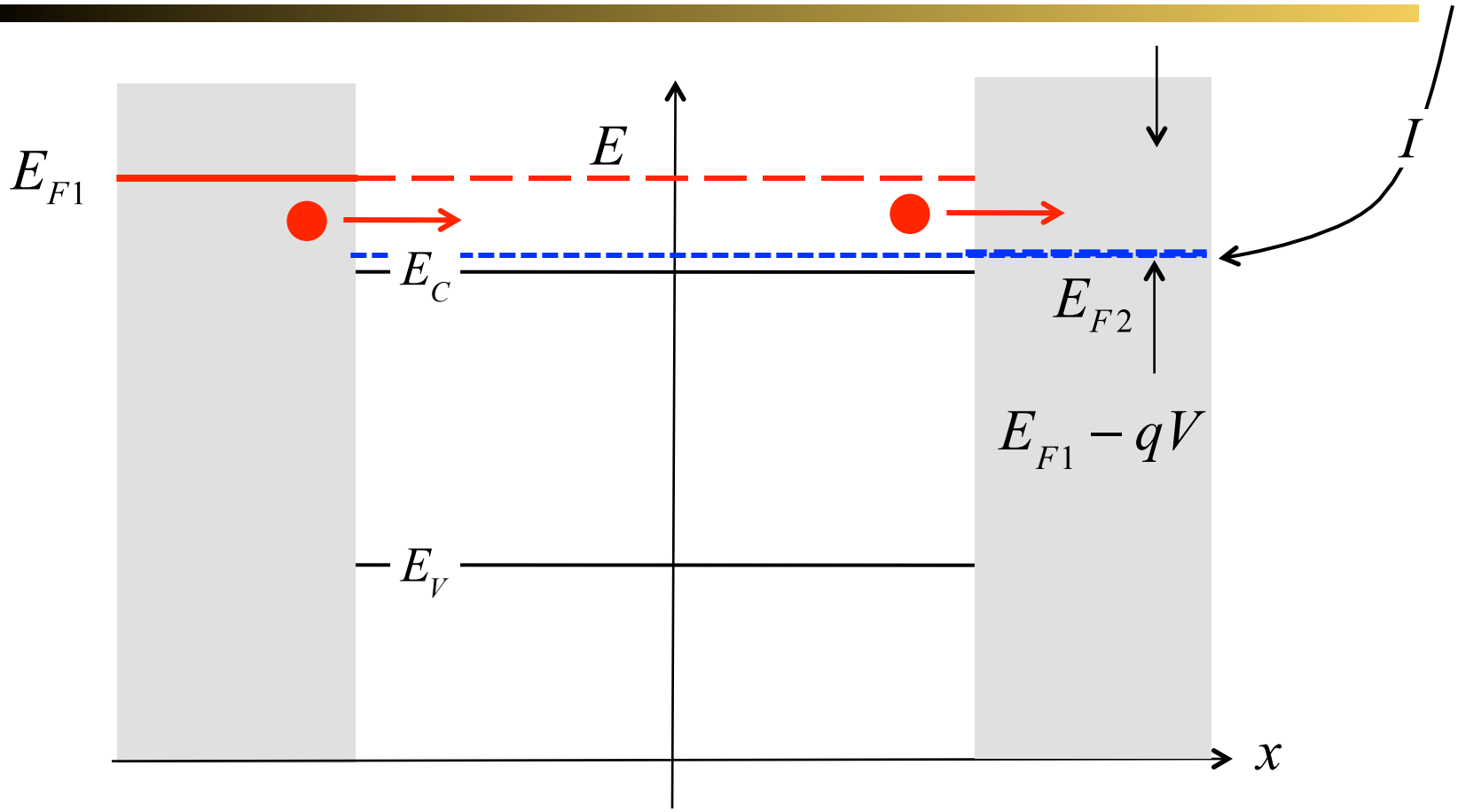

current is due to electrons flowing in the conduction band

P-type conduction

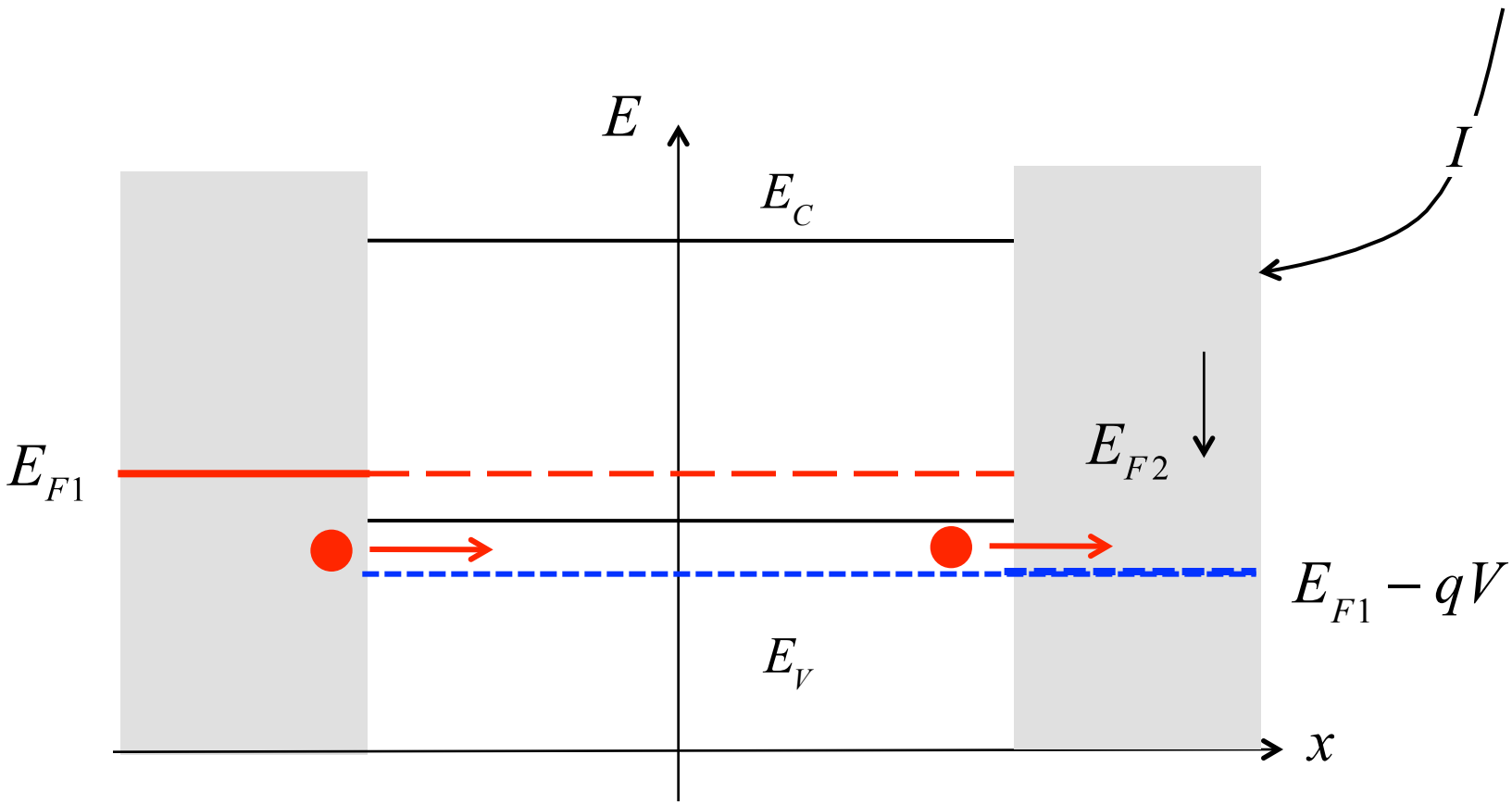

current is due to electrons flowing in the valence band

What about ~~holes~~?

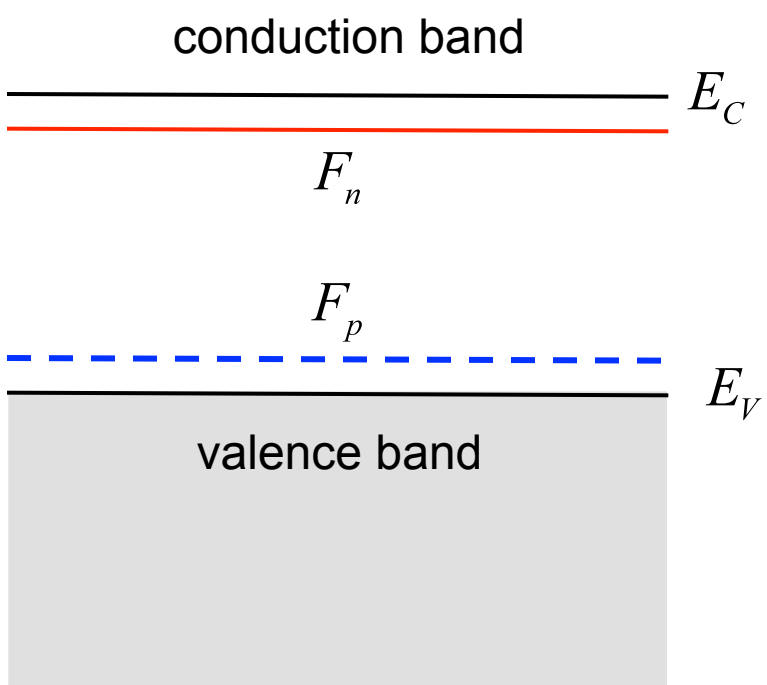

n-type

$$I = G_n V$$

$$G_n = \frac{2q^2}{h}\int \mathcal{T}_C(E) M_C(E)\left(-\frac{\partial f_0}{\partial E}\right)dE$$

$$f_0(E) = \frac{1}{1+e^{(E-F_n)/k_BT}}$$

p-type

$$I = G_p V$$

$$G_p = \frac{2q^2}{h}\int \mathcal{T}_V(E) M_V(E)\left(-\frac{\partial f_0}{\partial E}\right)dE$$

$$f_0(E) = \frac{1}{1+e^{(E-F_p)/k_BT}}$$

All of these expressions refer to ***electrons*** in the conduction and valence bands

Bipolar conduction

$$I = \frac{2q}{h}\int_{E_1}^{E_2} \mathcal{T}(E)\, M(E)\,(f_1 - f_2)\, dE$$

$$M(E) = M_V(E_V - E) + M_C(E - E_C)$$

$$M_C(E) = A\frac{m_n^*}{2\pi\hbar^2}(E - E_C)$$

$$M_V(E) = A\frac{m_p^*}{2\pi\hbar^2}(E_V - E)$$

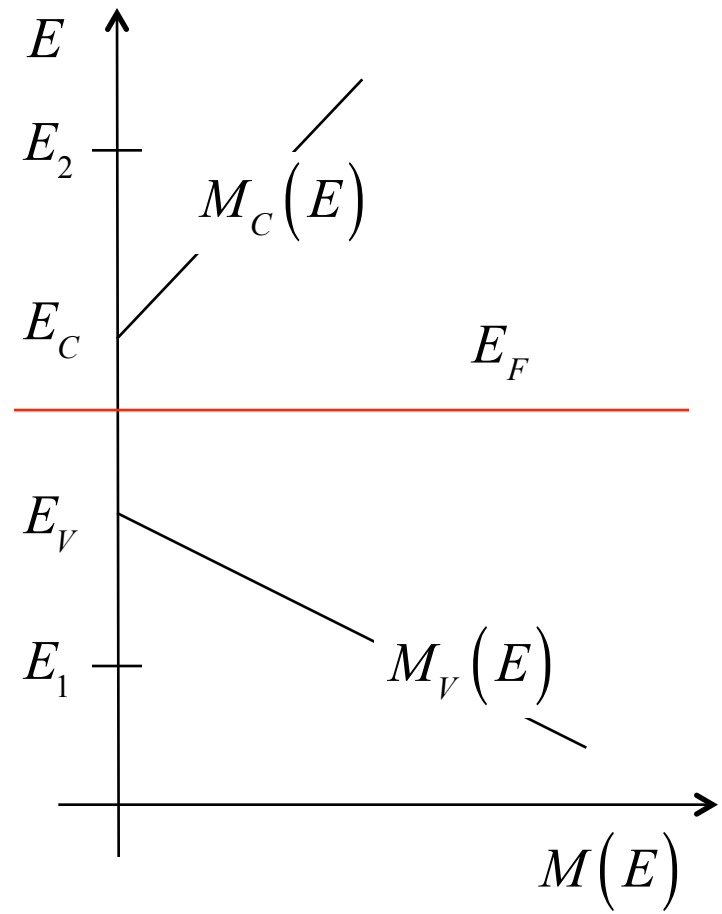

Landauer Approach

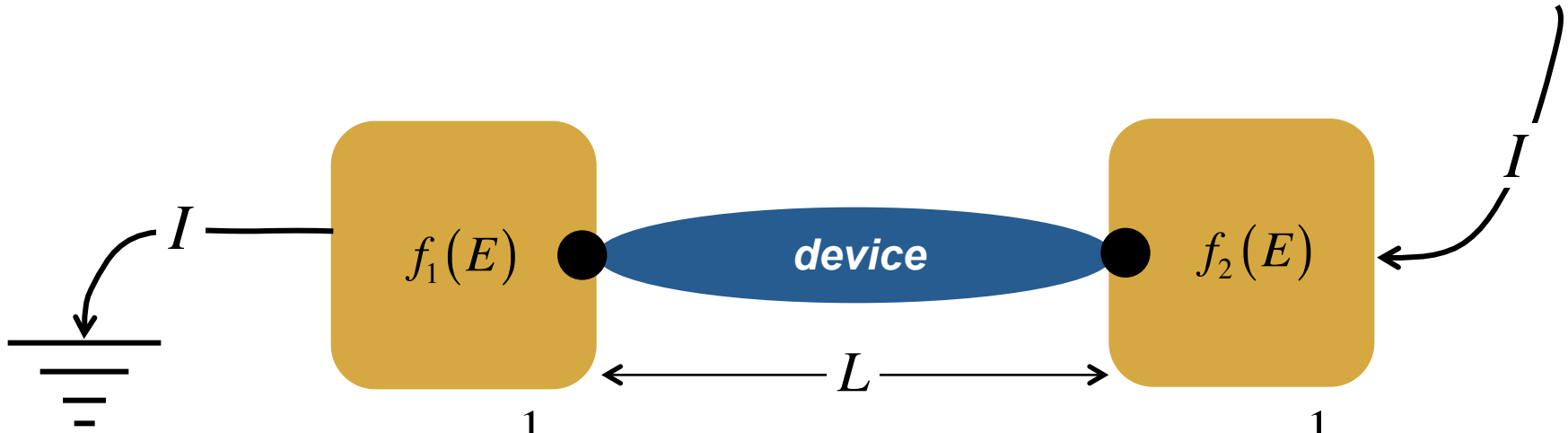

$$f_1(E) = \frac{1}{1+e^{(E-E_{F1})/k_BT}} \qquad f_2(E) = \frac{1}{1+e^{(E-E_{F2})/k_BT}}$$

$$I = \frac{2q}{h}\int \mathcal{T}(E)M(E)(f_1 - f_2)\,dE$$

transmission, modes (channels), differences in Fermi functions