Proceedings of the ASME 2013 International Technical Conference and Exhibition on Packaging and Integration of Electronic and Photonic Microsystems
InterPACK2013
July 16-18, 2013, Burlingame, CA, USA

IPACK2013-73184

IMPACT OF MATERIAL PROPERTIES ON COOLING COP OF INTEGRATED THERMOELECTRIC MICROCOOLERS

Yee Rui Koh
Purdue University
West Lafayette, IN, U.S.A.

Kazuaki Yazawa
Purdue University
West Lafayette, IN, U.S.A.

Ali Shakouri
Birck Nanotechnology Center, Purdue University
West Lafayette, IN, U.S.A.

ABSTRACT

Thermoelectric (TE) microcooling is promising for removing hotspots in integrated circuit chips. The cooling coefficient-of-performance (COP) of the on-chip thin film or superlattice micro-cooler (SLC) is a metric for assessing the energy efficiency of the hot spot removal. The COP is key for lowering total power consumption and minimizing heat sinking requirements. Due to the moderate performance compared to vapor compression cycles, researchers have devoted considerable effort to improving the figure-of-merit (ZT) of the material over the past decade. However, the impact of each of the individual thermoelectric properties has not been studied separately. We report our study based on an analytical model and analysis results that show the intrinsic impact of electrical conductivity, the Seebeck coefficient, and thermal conductivity, while the device thickness and the drive current are optimized for maximizing cooling COP. The results show that the power factor of the TE materials is a more important parameter than thermal conductivity reduction for improving the cooling performance of the on chip SLC.

NOMENCLATURE

- A area, m^2
- d thickness of thin film/ superlattice cooler, m
- F fill factor
- h heat transfer coefficient, W/m^2K
- I current, A
- Q heat flow, W
- q heat flux, W/m^2
- S Seebeck coefficient
- T temperature
- W power, W

GREEK SYMBOLS

- β thermal conductivity, W/mK
- η efficiency, %
- σ electrical conductivity, $1/\Omega m$
- ψ thermal resistance, K/W

SUBSCRIPTS

- s sample (IC circuit)
- a ambient
- c cold side
- h hot side
- m microchannel side of silicon substrate

INTRODUCTION

Thermal management of hot spots in integrated circuit (IC) chips has become a significant challenge with the advancement of IC chip manufacturing technology. The added complexity of miniaturized ICs creates localized high power-density spots, called hot spots. If the thermal management for the localized heating is not sufficient, it creates high temperature and thermal stress, often leading to the main failure mechanism in the IC chip. Since thermal design requirements are mostly driven by peak temperatures, reducing or eliminating hot spots could

alleviate the design requirements for the whole package [1]. A conventional bulk thermoelectric (TE) cooler has an area equal to the target IC chip and has a capability of cooling 1-10 W/cm^2 of heat flux [2]. Since the hotspot requires a very large cooling power density, ranging from 300 W/cm^2 to over 1,000 W/cm^2, conventional bulk coolers are not an optimal solution. Additionally, the power consumption of the conventional bulk cooler makes it ineffective [3] due to the significant increase in the power consumption. Thus the hotspot microcooler, which provides a significant temperature remediation, e.g. removing up to 80% of the temperature rise on the hotspot, can be an effective cooling method for IC chip [4].

In our earlier work, we performed numerical analysis of a hybrid system comprising a superlattice cooler (SLC) and a single-phase micro-channel heat sink for hotspot cooling [5], and an analytical optimization [6] for the hotspot heat removal. We developed a model based on the energy balance equations leading to an optimum design for cooling with minimum cooling power as reported in these papers. The optimum current and the optimum SLC thickness were carefully studied to satisfy the target temperature requirement while maximizing the energy efficiency. Our analytical modeling results show an agreement with the measurements results [5] and the results from electrothermal numerical simulations [6].

In our study, the SLC is considered as a bulk-like TE cooler in a small area of 500 µm x 500 µm embedded in a 1 cm x 1 cm chip area in accordance with the analytical model of the previous report [7]. In this work, we study the impacts of the thermoelectric properties on the coefficient-of-performance (COP), electrical power density of the device, and the drive current density. We set the maximum chip temperature to 85 °C and the temperature of the microchannel of silicon substrate to 74 °C as a set of boundary conditions. Most of previous reports on the TE microcooler [7][8][9] only focus on the drive current density. In this paper we report on, both the drive current density and the electrical power density, since the parameters differ due to different electrical resistivities contained in the models.

We set a goal to extract 700 W/cm^2 of heat flux from a 500 µm x 500 µm hotspot area while maintaining the maximum surface temperature of the chip (85 °C) and dumping the heat to 35 °C ambient air temperature. We investigate the impact of three thermoelectric material properties; the Seebeck coefficient, the electrical conductivity, and the thermal conductivity, on the cooling COP by individually changing these material property values. We will find the breakeven point of the thickness (~1 - 20 µm range for the SLC) and the minimum drive current. The electrical power density of the device and the COP of the SLC are the primary factors for evaluating the performance of the TE micro-coolers.

MODEL

We use the thermal and electrical resistive network model similar to our previous work [7]. The TE element is attached to the bottom of the IC chip. A heat flow Q_h is generated from the chip and conducted into the leg and continues to flow all the way into the heat sink (see Fig.1). In order to evaluate the impact of the thermoelectric properties on the cooling COP, we take into account the drive current. We consider the one-dimensional electro-thermal diffusion in a leg designed to match a 500 µm x 500 µm area of the hotspot. Using multiple legs only changes the balance between the drive current and the operating voltage, keeping the power consumption the same. To simplify further optimization, no heat loss out of the system is assumed in this model. Interface thermal resistances between the TE leg and the hot spot and that with the heat sink are included.

The figure-of-merit (ZT) of thermoelectric materials is defined as

$$ZT = \frac{\sigma S^2}{\beta} T_a \qquad (1)$$

where T_a = 300 K.

In the following study, the temperature of the material varies slightly but, since the temperature dependence of the material properties is very small, the values can be considered similar to the values at T = 300 K. We therefore also define the value of ZT to be as it is at room temperature; T_a=300 K.

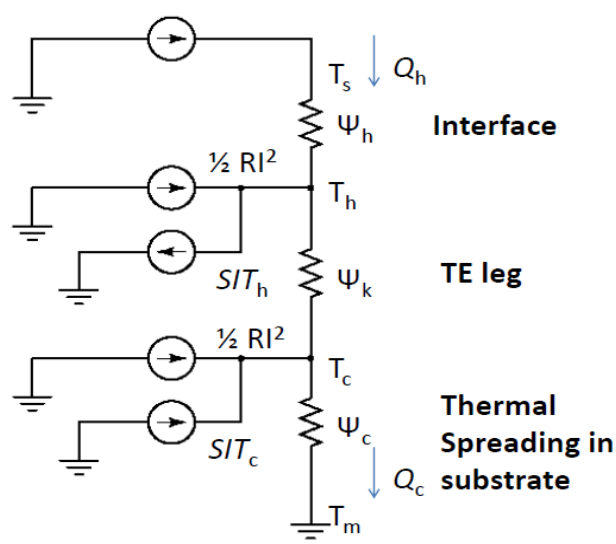

Figure 1: Thermal network of the one dimensional electro-thermal model for a TE micro-cooler.

The following set of equations is based on the energy balance at the temperature nodes T_s, T_h, T_c, and T_m according to the model (Fig. 1). The applied electrical current is I. The four external heat sources represent the Peltier effect at the nodes T_h and T_c, as well as the internal Joule heating by drive current at T_h and T_c. The equations contain thermal conductance K and the electrical resistance R, of the leg. Also the external thermal resistances, ψ_h and ψ_c, are considered in the model.

$$Q_h = \frac{T_s - T_h}{\psi_h} \tag{2}$$

$$Q_h - ST_h I + \frac{R}{2} I^2 = K(T_h - T_c) \tag{3}$$

$$K(T_h - T_c) + ST_c I + \frac{R}{2} I^2 = Q_c \tag{4}$$

$$Q_c = \frac{(T_c - T_m)}{\psi_c} \tag{5}$$

where

$$K = \frac{\beta FA}{d} \quad \text{(5a)} \quad \text{and} \quad R = \frac{d}{\sigma FA} \quad \text{(5b)}$$

From the equations above, Q_h is the heat extracted from the IC chips and Q_c is the rejected heat that flows to the heat sink. The temperature boundary (T_s and T_m) and the external thermal properties of the micro-cooler are fixed as constants. We always optimize the leg thickness to find the impact of changing individual thermoelectric properties. The objective is to minimize the drive current (minimum power consumption).

$$Q_h - Q_c = -RI^2 + SI(T_h - T_c) \tag{6}$$

By substituting equation (5) into (6),

$$T_c = \frac{\Psi_c Q_h + \Psi_c RI^2 - \Psi_c SIT_h + T_m}{1 - \Psi_c SI} \tag{7}$$

Solving Eq. (3) for T_c,

$$T_c = T_h + \frac{-Q_h + SIT_h - \frac{R}{2} I^2}{K} \tag{8}$$

By substituting Eqs. (5a) and (5b) into Eqs. (7) and (8), the general formula for the optimum drive current I is found as

$$I^3 + I^2 \left[\frac{\frac{\beta}{\sigma}\psi_c d + \frac{1}{2}\frac{d^2}{\sigma FA} + T_h \psi_c S^2 d}{-\frac{\psi_c S}{2\sigma FA} d^2} \right] + I \left[\frac{-\psi_c Q_h S d - T_h S d}{-\frac{\psi_c S}{2\sigma FA} d^2} \right] + \frac{Q_c}{-\frac{\psi_c S}{2\sigma FA} d^2} + \frac{\beta FA(\psi_c Q_h + T_m - T_h)}{-\frac{\psi_c S}{2\sigma FA} d^2} = 0 \tag{9}$$

Since the above formula contains a third order term for the current I, the analytical software, Mathematica, is used to solve for I.

If the leg coverage area is smaller than the hotspot area, a couple of interfacial spreading thermal resistance may also need to be considered. In this case, spreading thermal resistance is not considered since the hotspot and the SLC leg are the same size and the heat flow is uniform.

Subsequently, the drive current, I, obtained from Eqn. (9) can be used in Eqn. (10) to calculate the required power of the device.

$$P = I^2 R \tag{10}$$

The required power of the device is essential for determining the COP of the SLC. The COP of the model is given by Eqn. (11)

$$COP = \frac{Q_h}{P} = \frac{Q_h}{I^2 R} \tag{11}$$

RESULTS AND DISCUSSIONS

We set for a baseline material, ZT=0.86, with the baseline parameters; σ=5.5x10⁴ 1/Ωm, S=2.8x10⁻⁴ V/K, and β=1.5 W/mK for the entire analysis. Fig. 2(a) shows the optimum drive current density I/A vs. leg thickness, d. It also shows the impact of changing individual property parameters to double the ZT value. We should emphasize that the optimum drive current is calculated to achieve the thermal constraint at the hotspot, and it is not necessarily the maximum cooling power (Q_h). Increasing the Seebeck coefficient by sqrt(2) reduces the required drive current by nearly 2/3. The minimum is observed at a leg thickness of 10-20 μm. Increasing electrical conductivity, σ, provides approximately 10% reduction in the required drive current and shows better improvement for leg thicknesses greater than 20 microns . Decreasing thermal conductivity, β, shifts the optimum leg thickness to approximately 5 microns for the minimum drive current. In this case the resulting current reduction is similar to the reduction obtained by increasing the electrical conductivity.

From the above general trends, the Seebeck coefficient is seen as the most influential property for impacting cooling efficiency. To fulfill the temperature constraint of the analysis (T_h=85 °C and T_m=74 °C), a large temperature gradient must be created by applying a higher current for a thin leg with a low thermal resistance. As the leg thickness increases, the thermal resistance increases. Larger thermal resistance raises the Joule heating in the material and further increases the temperature difference. Therefore, low current is necessary. If the leg

thickness is larger than optimum, the temperature difference created by the additional thermal resistance becomes larger than required to meet the hot spot temperature constraints. In this situation, the current is more than that required to create a suitable temperature difference across the TE material by the Peltier effect.

Fig. 2(b) shows the electrical power density I^2R/A versus the leg thickness, d, with a variation of properties changes. Smaller d value results in a lower cooling power density. A decrease in thermal conductivity results in a drop of power density about 40% over a range of leg thicknesses from 1 to 20 μm. With an increase in S and decrease in electrical conductivity, σ, the electrical power density drops by at least 50% with a 2 μm leg thickness. The drop in power density caused by changing S and σ becomes more significant with larger leg thickness.

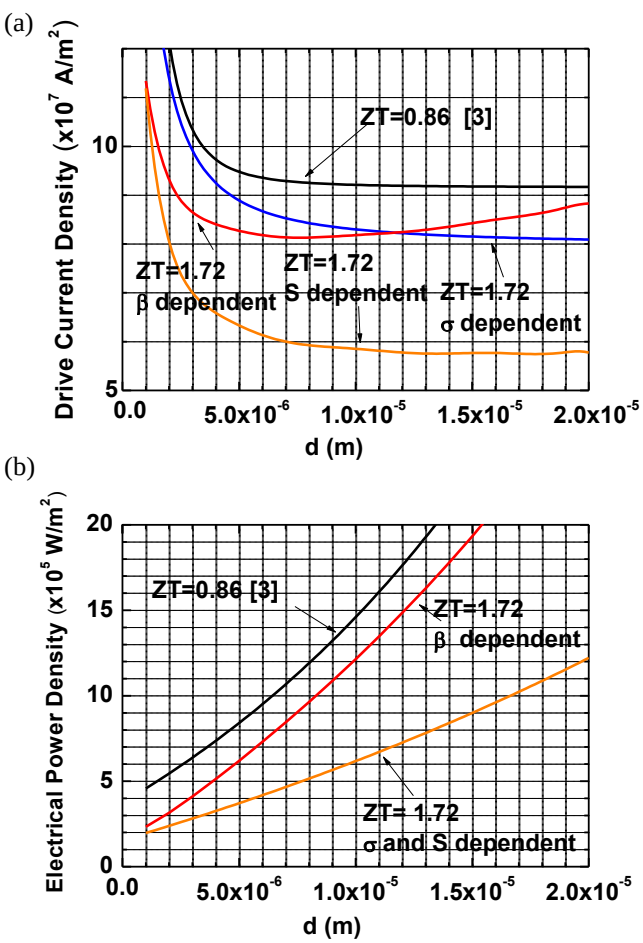

Figure 2: (a) Drive current density and (b) Electrical power density versus leg thickness d, respectively.

In comparing Figs 2(a) and 2(b), some interesting trends can be observed. Of the three parameters, the Seebeck coefficient has the largest impact on the drive current density, while both the Seebeck coefficient and the electrical conductivity impact equally the electrical power density. This condition is observed due to Seebeck coefficient and electrical conductivity enhancement models have different electrical resistivity. The studied cases in Fig. 3 show the variation of changing the power factor by changing the electrical conductivity and the Seebeck coefficient. By substituting the electrical resistance and the drive current into Eq. (10), we determine the required electrical power for cooling for the above cases. Therefore, enhancement of the electrical conductivity is also essential to the cooling performance of the SLC.

From the discussion above, we found that the power factor (σS^2) plays a significant role in the consumed electrical power density and both σ and S^2 have equal influence. We also analyzed the impact on power density for a range of Seebeck coefficients and the electrical conductivities. We formed four different combinations of power factor with ZT=2.59 (three times the baseline of 0.86), shown in Fig. 3. For example, 3σ1S indicates that the material has 3 times the electrical conductivity and the same Seebeck coefficient as the baseline. The largest drive current is required for the case of largest electrical conductivity, i.e. 3σ1S, and the drive current decreases as the electrical conductivity contribution decreases, in the order $2\sigma 1.5^{0.5}S$, $1.5\sigma 2^{0.5}S$, and then $1\sigma 3^{0.5}S$. Although different drive currents are required for all four combinations, all the models had the same consumed electrical power density. The electrical conductivity and the Seebeck coefficient therefore, play equal roles in improving the cooling performance of the SLC.

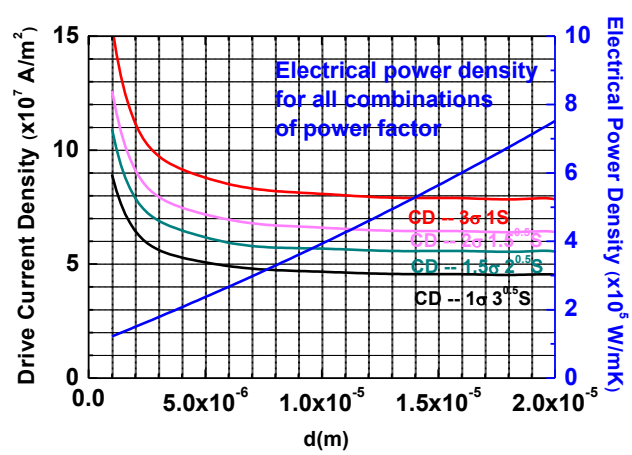

Figure 3: Drive current density and electrical power density for materials with ZT=2.59 versus SLC thicknesses. Electrical conductivity and the Seebeck coefficient of the models are based on the reference SLC with ZT=0.86.

The reason of the significance for power factor in the consumed electrical power density is not obvious since power factor equation (σS^2) does not directly appear in the Eqn. (9).

Unlike thermal conductivity, which is only related to the heat conductance of the model, both Seebeck coefficient and electrical conductivity also contribute to the electrical parameters of the model [10]. In order to achieve the target cooling power, effects of Peltier cooling $SI(T_h-T_c)$ and Joule heating (I^2R) are superposition between each other to create a temperature gradient to satisfy the fixed temperature boundaries (T_h and T_m). Fig. 3 shows that different combination of electrical conductivity and Seebeck coefficient with same power factor should always provide a same power density, thus they should also produce a same temperature gradient in thermoelectric module. Fig. 4 shows the temperature difference (T_h-T_c) of the ZT values of 0.86 and 1.72 with varying material properties. Both cold side temperature T_c of TE models of ZT=1.72 with Seebeck coefficient or electrical conductivity enhancement are same in different thicknesses. The results verify the explanation above. Therefore, instead of using electrical conductivity and Seebeck coefficient separately, power factor is a better indicator in determining the performance of the microcooler.

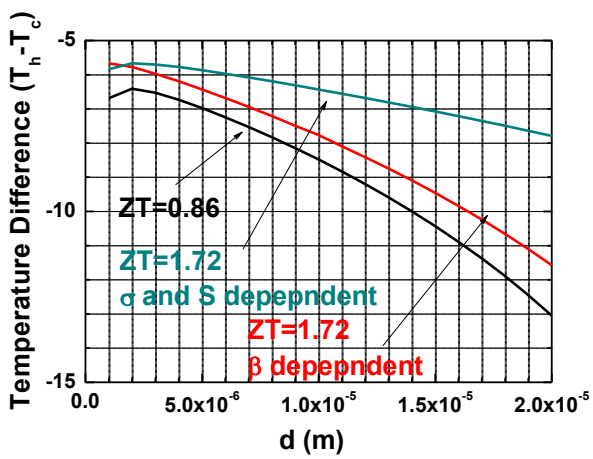

Figure 4: Temperature gradient (T_h-T_c) of TE model with different ZT values versus leg thickness.

In Fig. 5, the results of the analysis on the COP for ZT values of 0.86, 1.72, and 2.59 by varying material property values are shown. The COPs of all cases are inversely proportional to the leg thickness. The COP for ZT=2.59 with the improved power factor is the highest. This COP is roughly 3.6 times better than the baseline (ZT=0.86) at a 10 μm leg thickness. The second highest COP is for ZT=1.72 with an improved power factor. COP for ZT=2.59 with decreased thermal conductivity only provides 10-30% improvement compared to the baseline at a 10 μm leg thickness. Fig. 4 clearly shows that the COP can be improved significantly by improving the power factor.

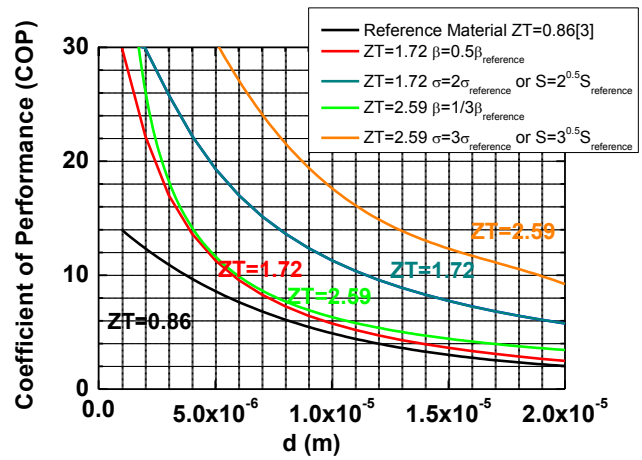

Figure 5: Coefficient of performance of SLC with different ZT values versus leg thickness.

Fig. 6 shows 3D curves of COP versus the optimum drive current and the leg thickness for different materials with a combination of material properties for improving ZT. This figure is an extension of Fig. 5 showing the optimum drive current density as well. The current density in the Fig. 6 is the optimum current density corresponding to the TE thickness shown in the Fig 2(a). All the models have leg thicknesses from 1-20 μm and a drive current density range from 4-15 MA/m^2. The COP of the baseline material is under 15 for the range of thicknesses we investigated. Additionally, the drive current density for the baseline material is highest (~9-15x10^7 A/m^2) in this range. In contrast, ZT=2.59 with the Seebeck coefficient enhancement has the highest COP, approaching 50. This case also requires the lowest drive current density (~4-9x10^7 A/m^2).

The thinner the leg, the larger the COP however, a leg design that is too thin requires a significantly large drive current which is not practical and parasitic electrical contact resistance as well as substrate thermal resistance will start to dominate. For example, if the leg thickness is less than 0.5 μm for the baseline, the microcooler is unable to produce sufficient cooling power to meet the required temperature constraints.

In summary, a higher COP is achievable with a thinner leg, and the enhancement of the Seebeck coefficient or electrical conductivity provides a better COP than the enhancement of the thermal conductivity.

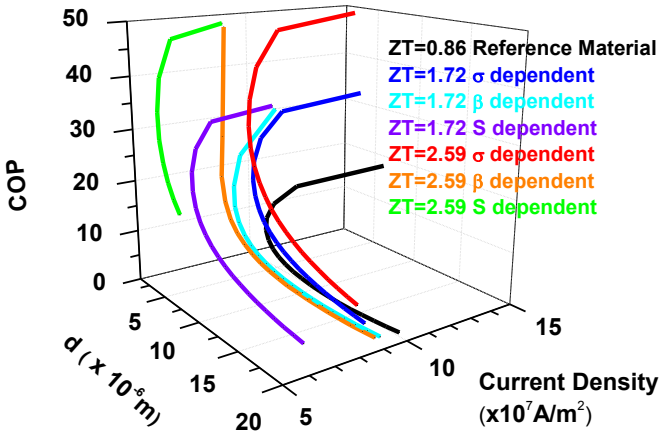

Figure 6: Coefficient of performance (COP) versus optimum current density of the model and leg thickness.

CONCLUSIONS

We developed a set of analytical formulas to find the minimum drive current for a given maximum hot spot temperature with an optimum thickness of the SLC. Due to the complexity of the formulas, we used a numerical approach for optimization. We analyzed the cooling COP and demonstrated energy efficient optimum cooling with varied impacts of individual thermoelectric properties of the SLC. Thermal conductivity plays a minor role in the COP, while the Seebeck coefficient and the electrical conductivity improvements for the same ZT are equally significant for improving the COP. Doubling the power factor provides a higher COP than quadrupling the ZT value by reducing thermal conductivity alone. We concluded that the power factor is the key parameter for improving the COP for energy-efficient spot cooling in future material development.

REFERENCES

[1] A. Shakouri, “Nanoscale Thermal Transport and Microrefrigerators on a Chip,” Proceeding of *IEEE*, vol. 94, p. 1613-1638, 2006.

[2] S.H. Kong, D.D.L. Wijngaards and R.F. Wolffenbuttel, “Study of IC Compatible On-Chip Thermoelectric Coolers,” Japanese Journal of Applied Physics, vol. 44, p. 5736-39, 2005.

[3] K. Fukutani and A. Shakouri, "Optimization of the Thin Film Microcoolers for Hot Spot Removal in Packaged Integrated Circuit Chips," *22nd IEEE Semi-THERM Symposium* , p. 130, 2006.

[4] V. Litvinovitch, P. Wang and A. Bar-Cohen, “ Superlattice µTEC Hot Spot Cooling,” in *IEEE* Transaction On Components And Packaging Technologies, vol. 33, 2010.

[5] V. Sahu, A. G. Fedorov, Y.K. Joshi, K. Yazawa, A. Ziabari, A. Shakouri, "Energy Efficient Liquid-Thermoelectric Hybrid Cooling for Hot-spot Removal," in *Proceedings of the 28th Semi-Therm symposium*, San Jose, 2012.

[6] P. Wang, A. Bar-Cohen, B. Yang, G.L. Solbrekken and A. Shakouri, “ Analytical Modeling of Silicon Thermoelectric Microcooler,” Journal Of Applied Physics, Vol. 100, p. 014501, 2006.

[7] K. Yazawa, A. Ziabari, Y. R. Koh, A. Shakouri, V. Sahu, A. G. Fedorov and Y. Joshi, "Cooling Power Optimization for hybrid Solid-state and Liquid Cooling in Integrated Circuit Chips with Hotspots," in *13th IEEE ITHERM* , San Diego , 2012.

[8] S. Lee, S. Song, V. Au, and K.P. Moran, "Constriction/Spreading Resistance Model for Electronic Packaging," in *4th ASME/JSME thermal Engineering Joint Confeence* , 1995.

[9] K. H. Lee, H. Kim and O. J. Kim, "Effect of Thermoelectric and Electrical Properties on the Cooling Performance of a Micro Thermoelectric Cooler," *J. Electronic Materials*, vol. 39, p. 1566, 2010.

[10] A. Shakouri and S. Li, “Thermoelectric Power Factor for Electrically Conductive Polymers,” in Eighteenth International Conference on Thermoelectric, 1999.