Materials Science and Engineering 405
Prof. Mark C. Hersam, Fall 2006
PHYSICS OF SOLIDS

Homework #6

Due: Thursday, November 30, 2006

1.) **(35 points)** In Lecture #25, we considered the temperature dependence of the free carrier concentration as a function of temperature in a doped semiconductor. In particular, Fig. 3-18 showed three regimes: intrinsic, extrinsic, and ionization. While Fig. 3-18 is qualitatively correct, it quantitatively exaggerates the relative temperature dependence between the intrinsic and ionization regimes. In this problem, you will correct this problem by quantitatively recalculating Fig. 3.18 for silicon doped with 10^{15} donors/cm^3. In particular, assume the following parameters for silicon: E_g = 1.11 eV; m_n^* = 1.1m_0; m_p^* = 0.58m_0; m_0 = free electron mass. In addition, assume that the donor ionization energy is 45 meV.

(a) Using your favorite mathematical software (e.g., Matlab, Mathematica, Maple, etc.), calculate and plot the energy of the Fermi level with respect to the valence band edge (i.e., $E_f - E_v$) as a function of 1000/T for 50 K < T < 1000 K.

(b) Using your results from part (a), calculate and plot the electron concentration (i.e., n) as a function of 1000/T for 50 K < T < 1000 K. Like Fig. 3-18, use a logarithmic scale for n.

2.) **(30 points)** Throughout this question, consider a Hall effect measurement performed on an intrinsic semiconductor:

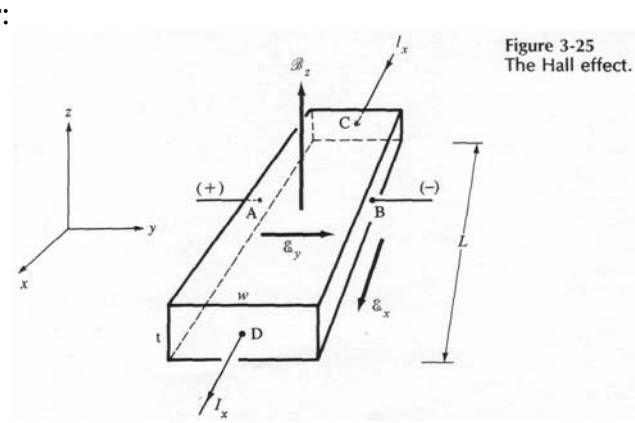

(a) Assuming that the intrinsic carrier concentration is n_i and the electron and hole mobilities are μ_n and μ_p respectively, show that the Hall coefficient is given by:

$$R_H = \frac{(\mu_p - \mu_n)}{en_i(\mu_p + \mu_n)}$$

(b) Assuming that scattering is equivalent for electrons and holes, determine the ratio of electron effective mass to hole effective mass that will lead to a Hall voltage equal to zero.

3.) **(35 points)** In Lecture #27, we considered the solution of the diffusion equation for steady state hole injection into a semiconductor whose length (l) greatly exceed the hole diffusion length (L_p). In this case, we found:

$$\Delta p(x) = p_i e^{-x/L_p} \qquad\qquad J_p(x) = e\frac{D_p}{L_p}\Delta p(x)$$

(a) These equations well describe hole injection across a forward biased *p-n* junction diode. In particular, it is evident from these equations that the hole current injected across the junction is: $J_p(x=0) = e\frac{D_p}{L_p}p_i$. An alternative way for calculating the injected hole current is to calculate the total charge stored per unit area by integrating $e\Delta p(x)$ and then dividing the result by the average lifetime of a hole (i.e., τ_p). Use this approach to verify that: $J_p(x=0) = e\frac{D_p}{L_p}p_i$.

(b) A *narrow-base diode* is analogous to the aforementioned situation except that $l << L_p$, which changes the second boundary condition to $\Delta p(x=l) = 0$. In this case, show that the diffusion equation yields: $\Delta p(x) = p_i \frac{e^{(l-x)/L_p} - e^{(x-l)/L_p}}{e^{l/L_p} - e^{-l/L_p}}$.

(c) For a narrow-base diode, show that: $J_p(x=0) = e\frac{D_p}{L_p}p_i \coth\frac{l}{L_p}$.

(d) Since the length of the semiconductor is shorter than the hole diffusion length in a narrow-base diode, not all of the holes will recombine within the semiconductor. In other words, the surviving holes will recombine at the electrical contact at $x = l$. Show that the current due to recombination at this contact is: $J_p(contact) = e\frac{D_p}{L_p}p_i \operatorname{csch}\frac{l}{L_p}$.

<u>Note</u>: The narrow-base diode analysis is the starting point for the analysis of bipolar junction transistors.