Lecture 7: Comparison to Experimental Results

Mark Lundstrom

Electrical and Computer Engineering
Network for Computational Nanotechnology
and
Birck Nanotechnology Center
Purdue University
West Lafayette, Indiana USA

ballistic MOSFET (MB)

$$I_D = WC_{inv}\upsilon_T\left(V_{GS} - V_T\right)$$

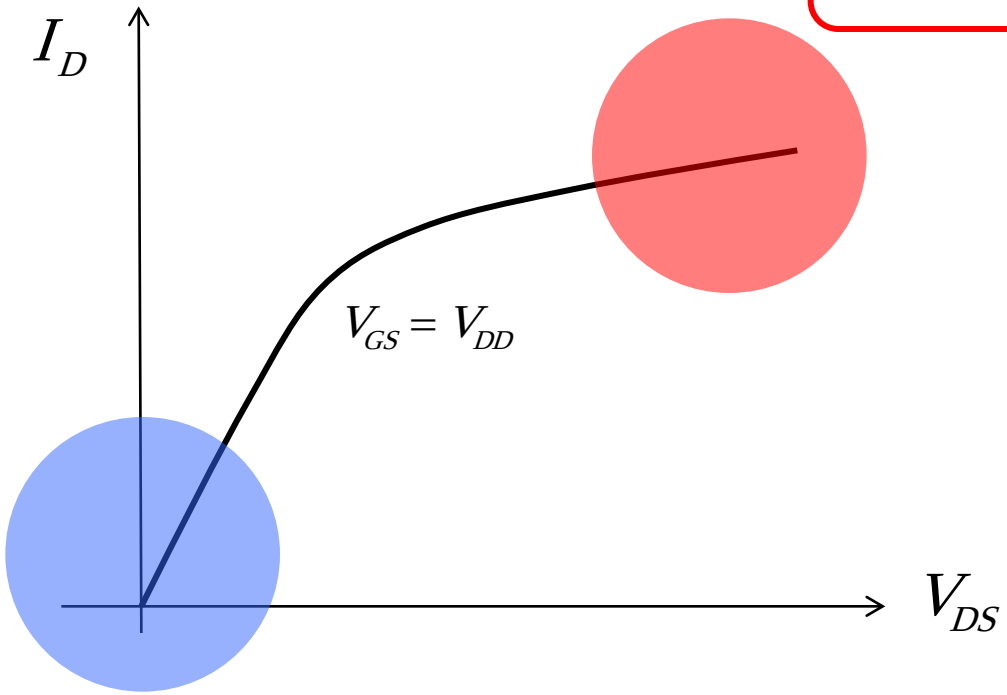

$$I_D = WC_{inv}\frac{\upsilon_T}{2k_BT_L/q}\left(V_{GS} - V_T\right)V_{DS}$$

ballistic MOSFET (FD)

$$I_D = WC_{inv}\upsilon_{inj}\left(V_{GS} - V_T\right)$$

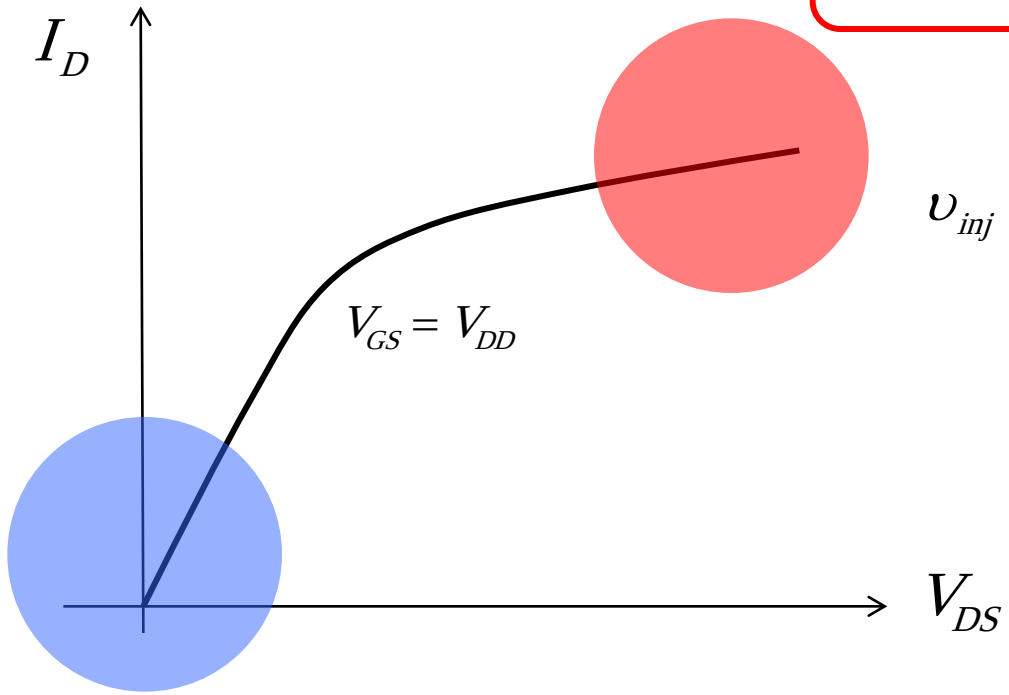

$$\upsilon_{inj} \equiv \sqrt{\frac{2k_BT_L}{\pi m^*}}\frac{\mathcal{F}_{1/2}\left(\eta_{F1}\right)}{\mathcal{F}_0\left(\eta_{F1}\right)}$$

$$I_D = WC_{inv}\frac{\upsilon_T}{2k_BT_L/q}\left(\frac{\mathcal{F}_{-1/2}\left(\eta_{F1}\right)}{\mathcal{F}_0\left(\eta_{F1}\right)}\right)\left(V_{GS} - V_T\right)V_{DS}$$

question

How close to the ballistic limit do modern MOSFETs operate?

2007 MOSFET parameters

1) Nitrided gate oxide (k = 5, t_{inv} = 2.2 nm)
2) Polysilicon gate
3) V_{DD} = 1.2V
4) Not intentionally strained
5) All measurements at T ~ 300K
6) Minimum mask channel length = 100 nm
   Minimum physical channel length (SEM) = 85 nm

(Thanks to Shuji Ikeda of ATDF for supplying these devices in Dec. 2007)

ballistic MOSFET: linear region

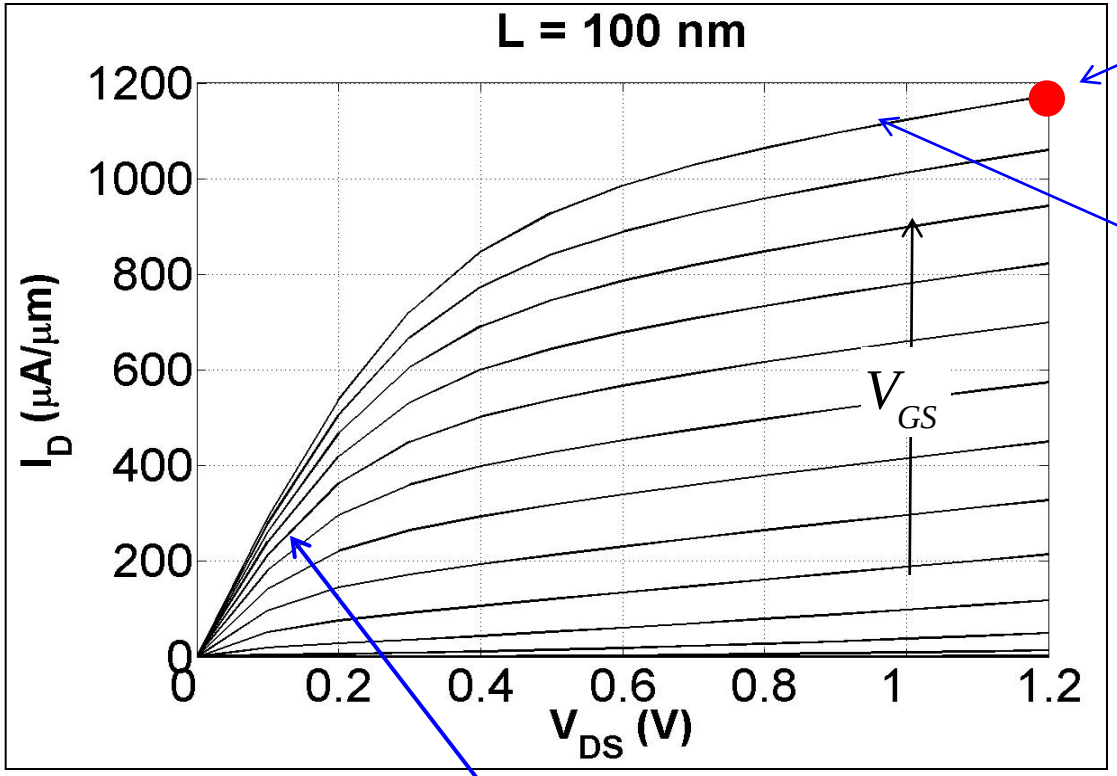

$$I_{ON} = 1120\,(\mu\text{A}/\mu\text{m})$$

$$r_d = 4.7\ k\Omega - \mu m$$

$$R_{TOT} = \frac{V_{DS}}{I_D} = 340\,(\Omega - \mu m)$$

transfer characteristics

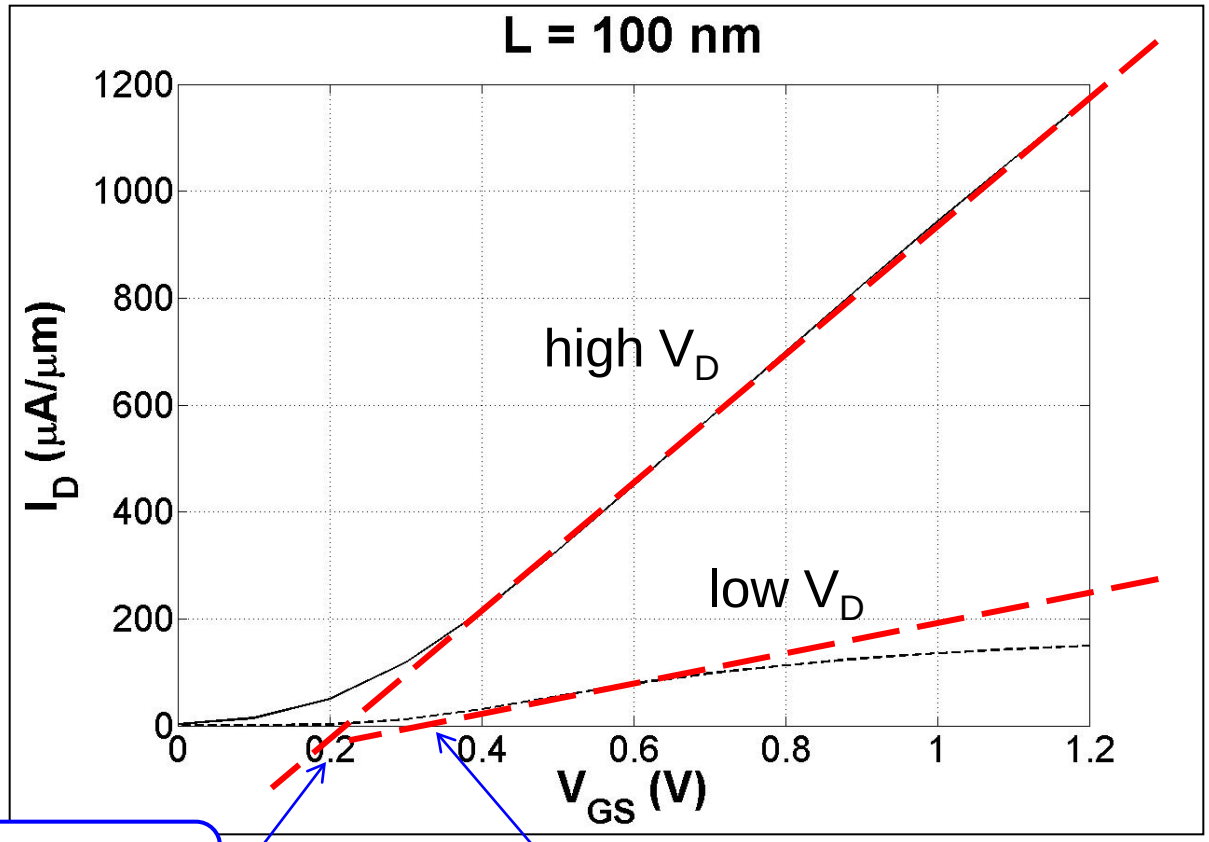

$V_{TSAT} = 0.26$ V

$V_{TLIN} = 0.28$ V

$\log_{10} I_D$ vs. V_{GS}

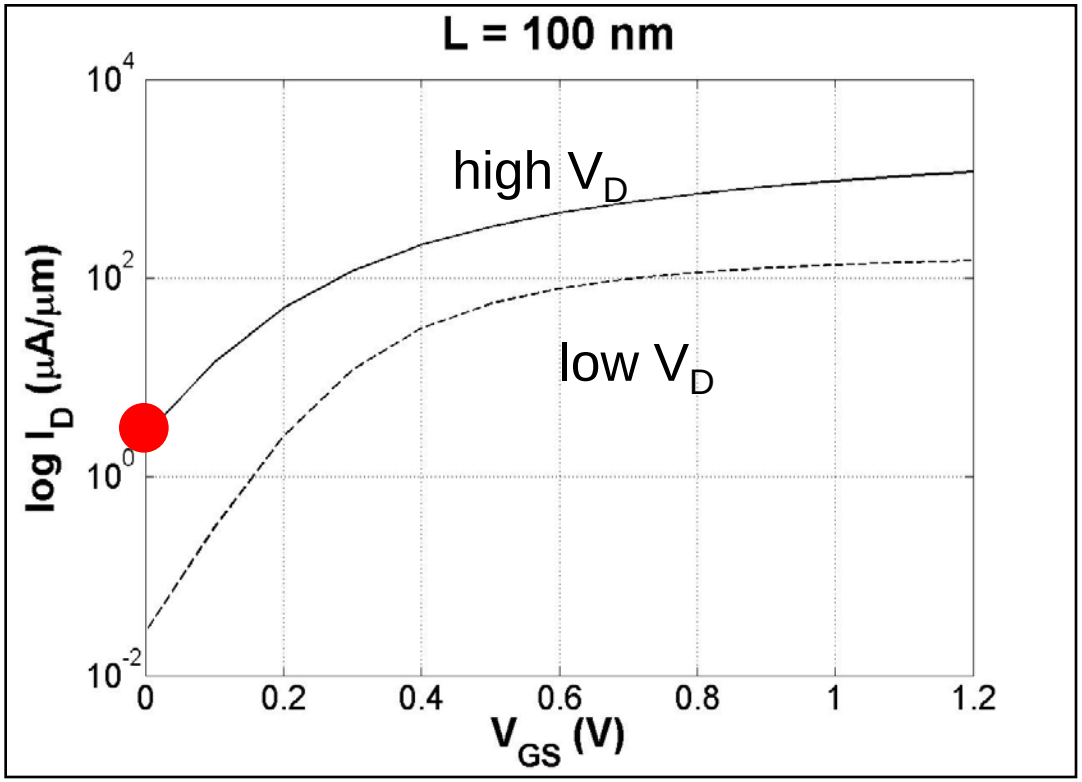

$$I_{OFF} = 0.95\left(\mu\text{A}/\mu\text{m}\right)$$

$$S = 110\left(\text{mV}/\text{dec}\right)$$

$$DIBL = 170\left(\text{mV}/\text{V}\right)$$

series resistance

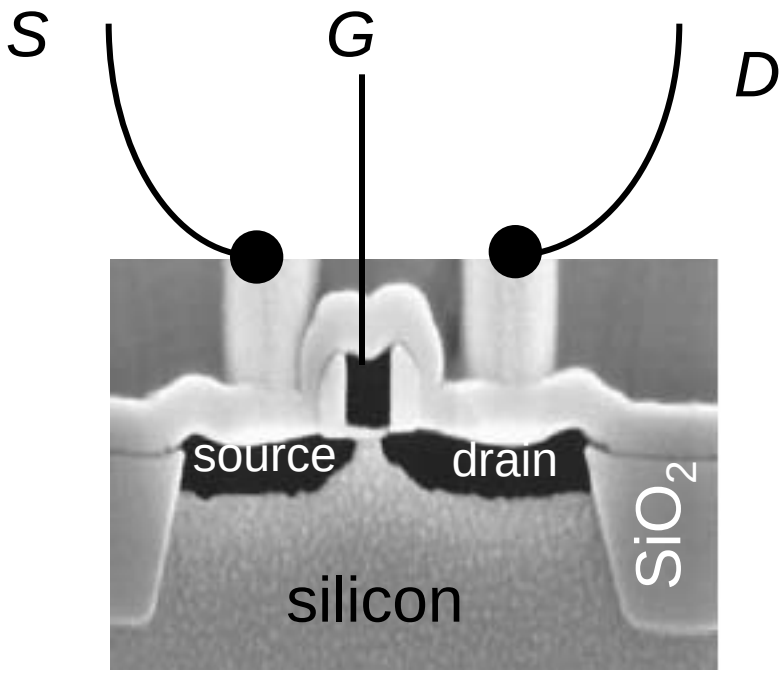

(Texas Instruments, ~ 2000)

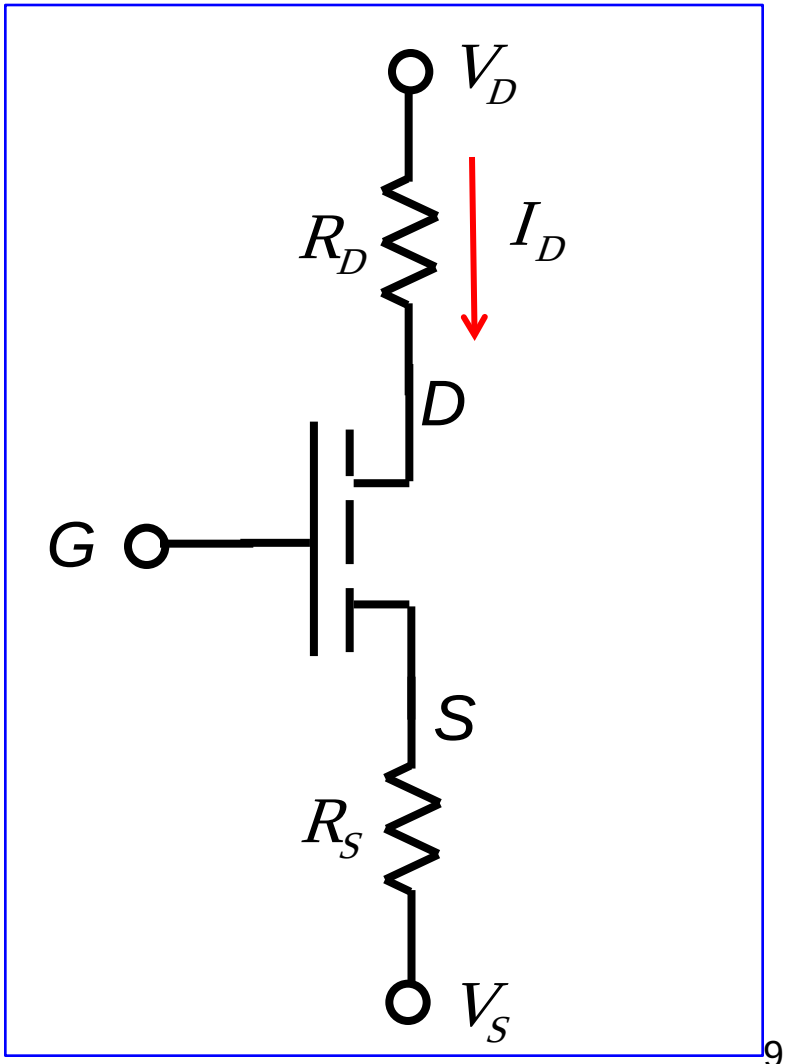

The actual voltages applied to the terminals are larger that the voltages on the “intrinsic” device.

series resistance

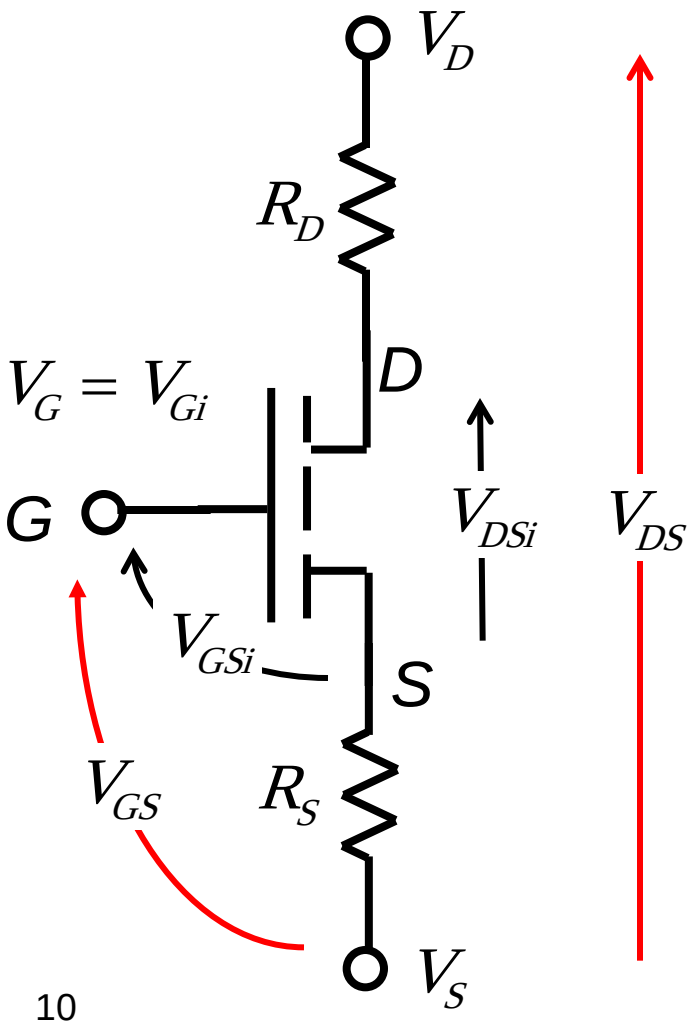

$$V_{Gi} = V_G$$

$$V_{Di} = V_D - I_D\left(V_G, V_{Si}, V_{Di}\right)R_D$$

$$V_{Si} = V_S + I_D\left(V_G, V_{Si}, V_{Di}\right)R_S$$

Given the terminal voltages and the IV characteristic of the intrinsic device, we can solve these two equations for the intrinsic voltages.

on-current analysis (injection velocity)

$$I_{ON} = 1120\left(\mu\text{A}/\mu\text{m}\right)$$

$$R_S + R_D = R_{SD} = 200 \pm 50\left(\Omega - \mu m\right)$$

$$V_{GSi} = 1.2 - I_{ON} R_S = 1.2 - 0.11 = 1.09V$$

$$C_{inv} = \frac{\kappa_{ox}\varepsilon_0}{T_{inv}} = 1.54 \times 10^{-6} \quad \text{F}/\text{cm}^2$$

$$Q_n(0) = C_{inv}\left(V_{GSi} - V_{TSAT}\right)$$

$$Q_I(0)/q\ ;\ \ 7.9 \times 10^{12}\ \text{cm}^{-2}$$

$$I_{ON} = WQ_n(0)\left\langle \upsilon(0)\right\rangle$$

$$\left\langle \upsilon(0)\right\rangle = \frac{I_{ON}}{WQ_n(0)}$$

$$\left\langle \upsilon(0)\right\rangle = 8.7 \times 10^6\ \text{cm}/\text{sec}$$

How close is this to the ballistic injection velocity?

comparison to ballistic limit

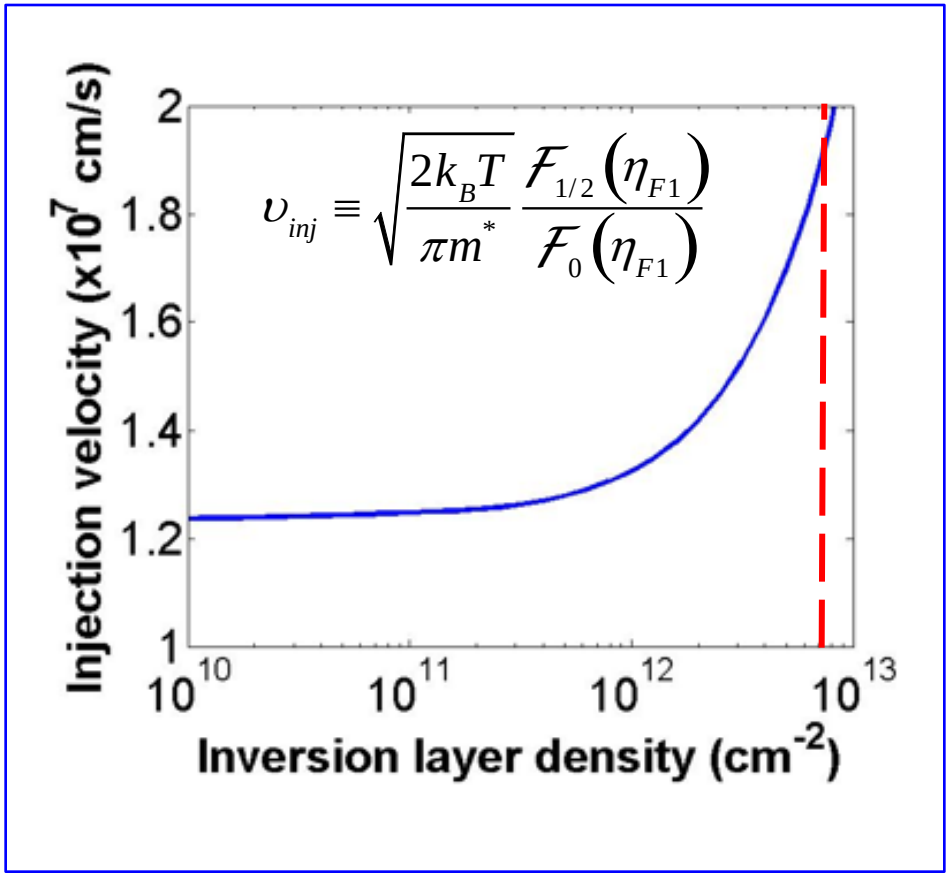

$$Q(0)/q \simeq 7.9\times10^{12}\ \text{cm}^{-2}$$

$$\langle \upsilon_{inj} \rangle = 1.9\times10^{7}\ \text{cm/sec}$$

We know the actual velocity,

$$\langle \upsilon(0) \rangle = 8.7\times10^{6}\ \text{cm/sec}$$

so we can estimate the ballistic ratio:

$$B_{sat} = \frac{I_{ON}}{I_{ON}(\text{ball})} = \frac{\langle \upsilon(0) \rangle}{\upsilon_{inj}}$$

ballistic MOSFET: saturated region

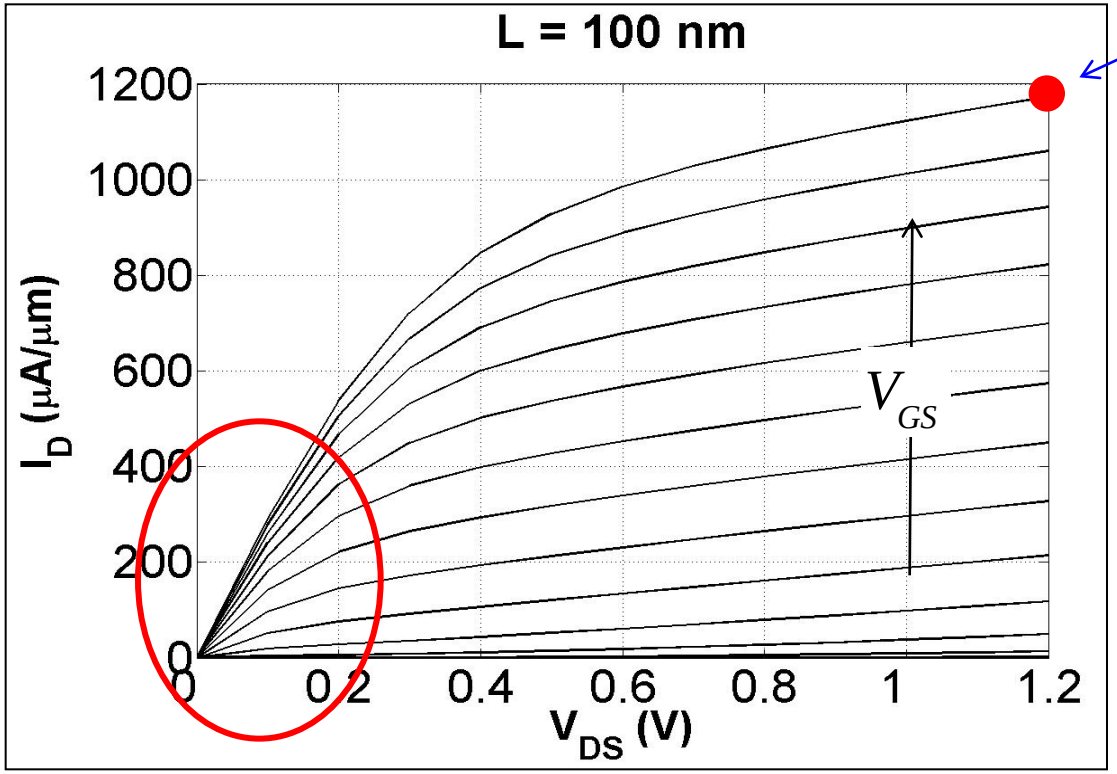

$$I_{ON} = 1120\,(\mu\text{A}/\mu\text{m})$$

$$B_{sat} = \frac{I_{ON}}{I_{ON}(\text{ball})} \approx 0.45$$

Modern Si MOSFETs operate at about one-half of the ballistic limit.

What about the linear region?

linear-current analysis (injection velocity)

$$R_{TOT}\left(V_{GS}=1.2V\right)=\frac{V_{DS}}{I_D}=340\left(\Omega-\mu m\right)$$

$$R_{TOT}=R_{CH}\left(V_{GS}\right)+R_{SD}$$

$$R_{SD}=R_S+R_D\approx 200\left(\Omega-\mu m\right)$$

$$R_{CH}\approx 140\left(\Omega-\mu m\right)$$

$$R_{CH}^{ball}=\frac{\left(2k_BT/q\right)}{Q_I(0)\upsilon_T}\frac{\mathcal{F}_0\left(\eta_{F1}\right)}{\mathcal{F}_{-1/2}\left(\eta_{F1}\right)}$$

$$\approx 55\,\Omega-\mu m$$

$$V_{GSi}=V_{GS}-I_DR_S\approx V_{GS}$$

$$Q_n(0)=C_{inv}\left(V_{GSi}-V_{TLIN}\right)$$

$$Q_I(0)/q\ ;\ 8.9\times 10^{12}\ \text{cm}^{-2}$$

The measured channel conductance is less that one-third of the ballistic channel conductance.

ballistic MOSFET

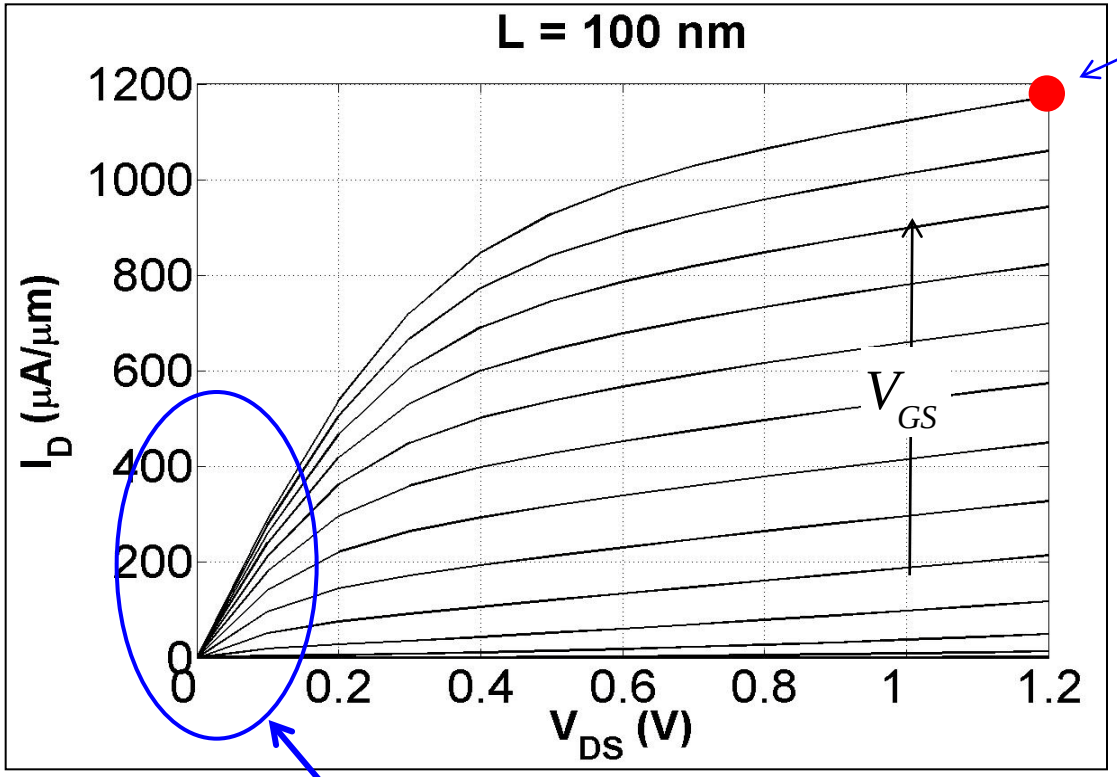

$$I_{ON} = 1120\left(\mu\text{A}/\mu\text{m}\right)$$

$$B_{sat} = \frac{I_{ON}}{I_{ON}\left(\text{ball}\right)} \approx 0.45$$

Modern Si MOSFETs operate somewhat closer to the ballistic limit under high drain bias as compared to low drain bias.

$$R_{CH} \approx 140\left(\Omega - \mu m\right) \quad B_{lin} = \frac{I_{lin}}{I_{lin}\left(\text{ball}\right)} \approx 0.35$$

comparison to numerical simulations

ETSOI

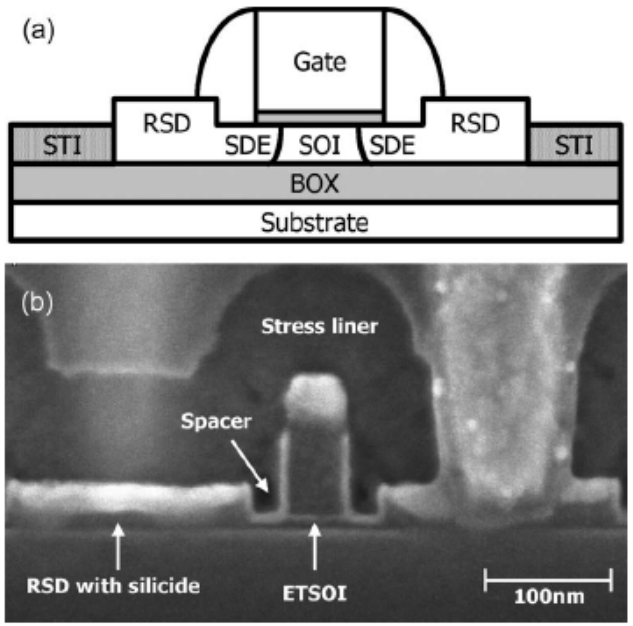

A. Majumdar, Z. Ren, S. J. Koester, and W. Haensch, Undoped-Body Extremely Thin SOI MOSFETs With Back Gates, *IEEE Trans. Electron Dev.*, **56**, 2270-2276, 2009.

nanoMOS

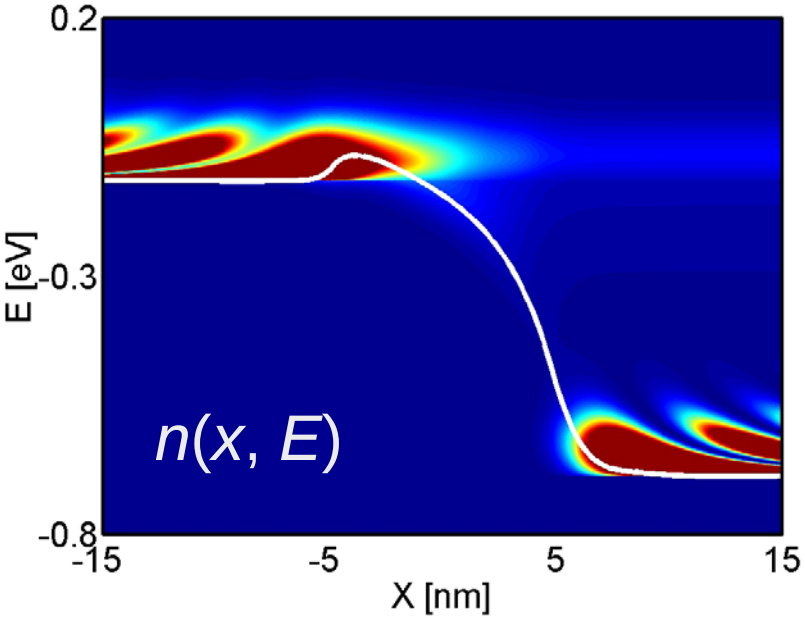

www.nanoHUB.org

comparison with experiment: Silicon

$$L_G = 40 \text{ nm}$$

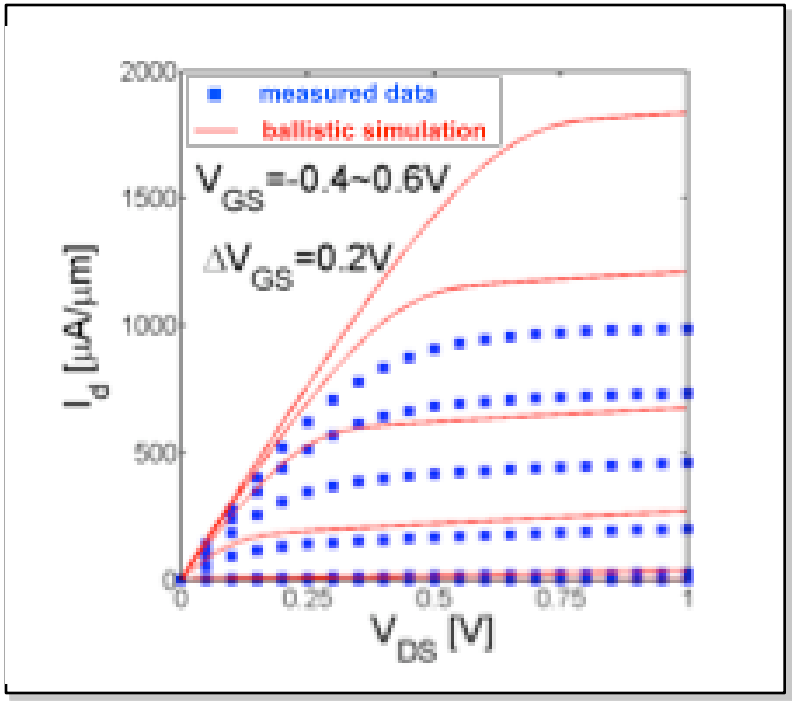

$$I_{Dlin} / I_{ballistic} \approx 0.2$$

$$I_{ON} / I_{ballistic} \approx 0.6$$

- Si MOSFETs deliver > one-half of the ballistic on-current. (Similar for the past 15 years.)
- MOSFETs operate closer to the ballistic limit under high V_{DS}.

A. Majumdar, Z. B. Ren, S. J. Koester, and W. Haensch, "Undoped-Body Extremely Thin SOI MOSFETs With Back Gates," *IEEE Transactions on Electron Devices*, **56**, pp. 2270-2276, 2009.

Device characterization and simulation: Himadri Pal and Yang Liu, Purdue, 2010.

comparison with experiment: InGaAs HEMTs

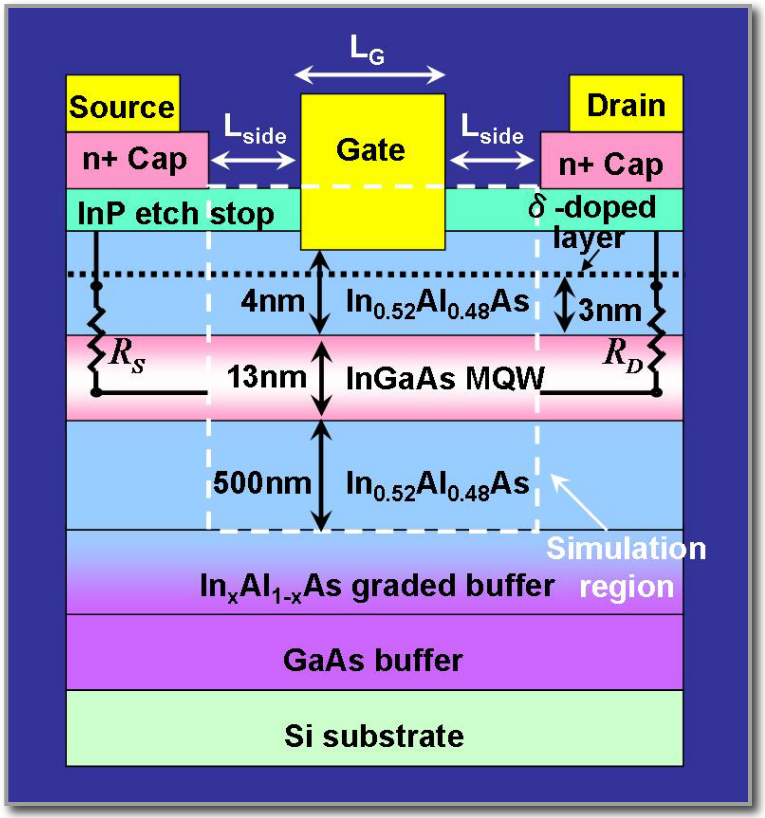

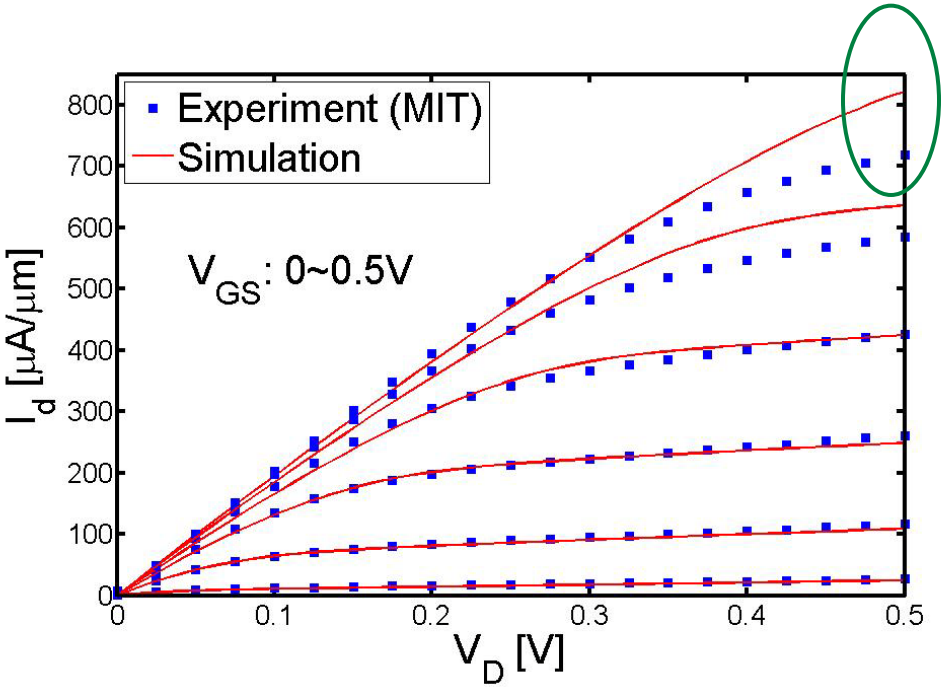

Jesus del Alamo group (MIT)

wrap-up

Si MOSFETs operate at roughly half of the ballistic limit.

III-V FETs operate close to the ballistic limit.

To understand this, we need to discuss scattering.

But first, let’s see if the theory of the ballistic MOSFET can be related to conventional (diffusive) MOSFET theory.

references

For some examples of analyzing experimental data, see:

A. Khakifirooz, O. M. Nayfeh, and D. Antoniadis, “A Simple Semiempirical Short-Channel MOSFET Current–Voltage Model Continuous Across All Regions of Operation and Employing Only Physical Parameters,” *IEEE Trans. Electron Dev*., **56**, 1674-1680, 2009.

D.-H. Kim, J. A. del Alamo, D. A. Antoniadis and B. Brar, “Extraction of Virtual-Source Injection Velocity in sub-100 nm III-V HFETs,” Intern. Electron Dev. Meeting, 2009.

A. Khakifirooz and D. A. Antoniadis, “Transistor Performance Scaling: The Role of Virtual Source Velocity and Its Mobility Dependence,” Intern. Electron Dev. Meeting, 2006.